X-Station 2

Guía de instalación de

Versión 1.08
Español
ES 101.00.XS2

suprema
SECURITY & BIOMETRICS

CONTENIDO

Instrucciones de seguridad 2

Íconos de instrucciones 2

Introducción 5

Componentes 5

Nombre y función de cada pieza 6
- Cables y conectores 7

Nota para el uso de código QR o de barras y licencia del dispositivo 8
- Cómo escanear un código QR o de barras 8
- Notas para la licencia del dispositivo 8

Instalación 9

Fijación del soporte y del producto 9

Conexión a la fuente de alimentación 11

Conexión de red 12
- TCP/IP 12

Conexión Entradas 13

Conexión del Relé 14
- Bloqueo a prueba de fallas 14
- Bloqueo seguro contra fallas 15
- Conexión de puerta automática 16

Conexión autónoma (Standalone) 17

Conexión a Secure I/O 2 18

Conexión Wiegand 19

Especificaciones del producto 20

Dimensiones 22
- XS2-QDPB, XS2-QAPB 22
- XS2-DPB, XS2-APB 22

Información de cumplimiento de la FCC 23

Declaración de conformidad de la UE (CE) 23

Apéndices 24

Descargo de responsabilidad general de Suprema 24

Aviso de derechos de autor 24

Licencia de código abierto 25
- GNU General Public License 25
- BoringSSL License 32
- OpenSSL License 32
- Original SSLeay License 33
- Licenses for support code 34
- Apache License 35

Instrucciones de seguridad

Lea estas instrucciones de seguridad antes de utilizar el producto para evitar lesiones personales y a otras personas, además de daños a la propiedad. El término “producto” en este manual se refiere al producto y a cualquier artículo que se entregue con el producto.

Íconos de instrucciones

Advertencia: Este símbolo indica situaciones que pueden causar la muerte o lesiones graves.

Precaución: Este símbolo indica situaciones que pueden causar lesiones moderadas o daños a la propiedad.

Nota: Este símbolo indica notas o información adicional.

Advertencia

Instalación

Cuando utilice una fuente de alimentación de alta capacidad, preste especial atención para evitar cablear de forma incorrecta.

- El cableado incorrecto puede provocar graves daños en el producto, incendios o descargas eléctricas.

No instale ni repare el producto arbitrariamente.

- Esto puede provocar descargas eléctricas, incendios o daños en el producto.
- Los daños causados por cualquier modificación o incumplimiento de las instrucciones de instalación pueden anular la garantía del fabricante.

No instale el producto en un lugar con luz solar directa, humedad, polvo, hollín ni fuga de gas.

- Esto puede provocar una descarga eléctrica o un incendio.

Instale el producto en un lugar bien ventilado y fresco, lejos de la luz directa del sol, a fin de evitar el sobrecalentamiento cuando se instala en áreas exteriores.

No ponga el producto dentro de un gabinete sellado cuando lo instale en el exterior.

- Aumenta la temperatura interna del gabinete y puede provocar descargas eléctricas, incendios o fallas.

No instale el producto en una ubicación con calor proveniente de un calefactor eléctrico.

- Esto puede provocar un incendio debido a sobrecalentamiento.

Instale el producto en una ubicación seca.

- La humedad y los líquidos pueden provocar descargas eléctricas o daños en el producto.

No instale el producto en un lugar donde se vea afectado por las frecuencias de radio.

- Esto puede provocar un incendio o daños en el producto.

Funcionamiento

Mantenga el producto seco.

- La humedad y los líquidos pueden provocar descargas eléctricas, incendios o daños en el producto.

No utilice adaptadores de poder dañados, enchufes ni tomas eléctricas sueltas.

- Las conexiones inseguras pueden provocar descargas eléctricas o incendios.

No doble ni dañe el cable de alimentación.

- Esto puede provocar una descarga eléctrica o un incendio.

Precaución

Instalación

Lea este manual antes de instalar el producto para garantizar una instalación correcta y segura.

Cuando conecte el cable de alimentación y otros cables, asegúrese de conectarlos con la alimentación apagada en todos los dispositivos involucrados.

- Es posible que el producto no funcione correctamente.

Antes de conectar la alimentación al producto, vuelva a revisar el manual para asegurarse de que el cableado esté correcto y, luego, conecte la alimentación.

No instale el producto bajo la luz solar o la luz UV directas.

- Esto puede causar daños, mal funcionamiento, decoloración o deformación del producto.

No instale el cable de la fuente de alimentación en una ubicación por el que pasen personas.

- Esto puede causar lesiones o daños al producto.

No instale el producto cerca de objetos altamente magnéticos, como imanes, televisores, monitores (especialmente, los que cuentan con tubos de rayos catódicos) o altavoces.

- Es posible que el producto no funcione correctamente.

Mantenga las distancias mínimas entre los productos cuando instale varios de ellos.

- Es posible que el producto esté afectado por frecuencias de radio emitidas por otros productos y que no funcione correctamente.

Utilice un adaptador de alimentación aprobado por IEC/EN 62368-1 que admita un consumo de energía superior al del producto. Se recomienda encarecidamente utilizar el adaptador de alimentación que vende Suprema.

- Si no se utiliza la fuente de alimentación adecuada, el producto podría presentar fallas.
- Consulte Alimentación en las especificaciones del producto para conocer las especificaciones de consumo máximo de corriente.

Utilice una fuente de alimentación independiente para el Secure I/O 2, la cerradura eléctrica y el producto.

- Si se conecta y utiliza la misma fuente de alimentación, es posible que el producto no funcione correctamente.

No conecte ni utilice la fuente de alimentación y la alimentación a través de Ethernet (PoE) simultáneamente.

- Es posible que el producto no funcione correctamente.

Asegúrese de que la cubierta del cable esté completamente cerrada después de conectarla al producto para mantener las características de resistencia al agua y al polvo (clasificación IP65). Se recomienda utilizar una carcasa si el producto se instala en exteriores.

- El producto puede presentar un mal funcionamiento si se dañan las características de resistencia al agua y al polvo.

Precaución

Funcionamiento

No deje caer el producto ni lo someta a impactos.

- Es posible que el producto no funcione correctamente.

No desconecte la fuente de alimentación mientras actualiza el firmware del producto.

- Es posible que el producto no funcione correctamente.

No divulgue la contraseña a otras personas y cámbiela regularmente.

- Esto puede provocar una intromisión ilegal.

No presione los botones del producto con fuerza ni los presione con una herramienta afilada.

- Es posible que el producto no funcione correctamente.

No almacene el producto en lugares muy calientes ni muy fríos. Se recomienda utilizar el producto a temperaturas entre -20 °C y 50 °C.

- Es posible que el producto no funcione correctamente.

Cuando limpie el producto, tenga en cuenta los siguientes procedimientos.

- Limpie el producto con una toalla limpia y seca.
- Si necesita desinfectar el producto, humedezca el paño o la toallita con una cantidad adecuada de alcohol isopropílico y limpie con suavidad todas las superficies expuestas. Utilice alcohol isopropílico (que contenga un 70 % de alcohol isopropílico) y un paño limpio y no abrasivo, como un paño para limpiar la lente.
- No aplique líquido directamente sobre la superficie del producto.

No utilice el producto para ningún otro uso que no sea el previsto.

- Es posible que el producto no funcione correctamente.

Batería RTC

El uso de un tipo de batería no aprobado o incorrecto puede resultar en un riesgo de explosión. Deseche las baterías de acuerdo con las normas regionales o internacionales correspondientes en materia de residuos.

Introducción

Componentes

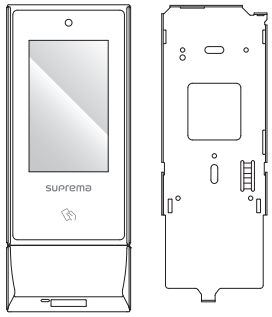	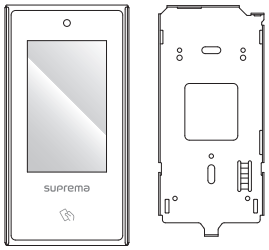	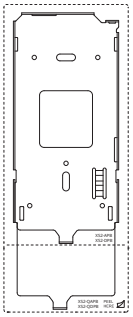
Dispositivo y soporte de pared (XS2-QDPB, XS2-QAPB)	Dispositivo y soporte de pared (XS2-DPB, XS2-APB)	Plantilla de perforación
Cables de conexión	Diodo	Resistencia de 120 Ω
Anclaje PVC x2	Tornillo de fijación x2	Tornillo de fijación del soporte (Tipo estrella)
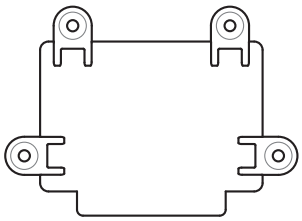			
Cubierta de cables	Termoretráctil	Guía rápida	Guía de software de código abierto

- Los componentes podrían variar según el entorno de instalación.
- Al montar el producto con el soporte, puede utilizar el tornillo de fijación (tipo estrella) incluido con el soporte en lugar del tornillo de fijación del producto para mejorar la seguridad.
- Para obtener más información sobre el producto, visite el centro de descargas de Suprema (https://download.supremainc.com) y consulte el manual del usuario.

Nombre y función de cada pieza

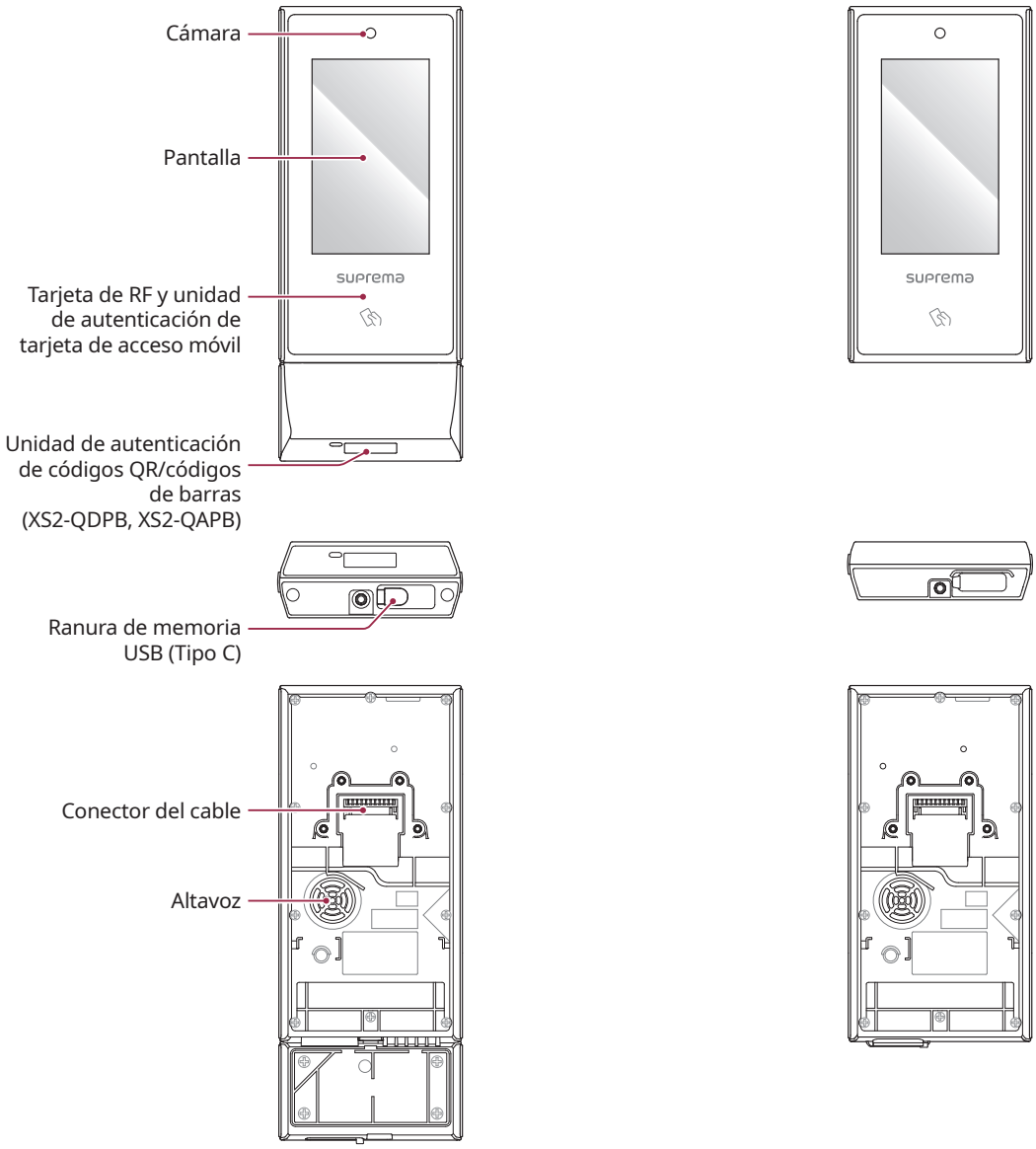

Nombre	Descripción
Cámara	Captura imágenes reales.
Pantalla	Provee la Interfaz de Usuario (IU) para operación.
Tarjeta de RF y unidad de autenticación de tarjeta de acceso móvil	Parte para escanear una tarjeta RFID o una tarjeta de acceso móvil de entrada.
Unidad de autenticación de códigos QR/ códigos de barras (XS2-QDPB, XS2-QAPB)	Parte para escanear un código QR o un código de barras de entrada.
Ranura de memoria USB (Tipo C)	Conexión del memoria USB.
Conector del cable	Conecta los cables. • Fuente de alimentación • Ethernet + PoE • RS-485 • Entrada y salida Wiegand • Entradas • Contacto
Altavoz	Transmite el sonido.

Cables y conectores

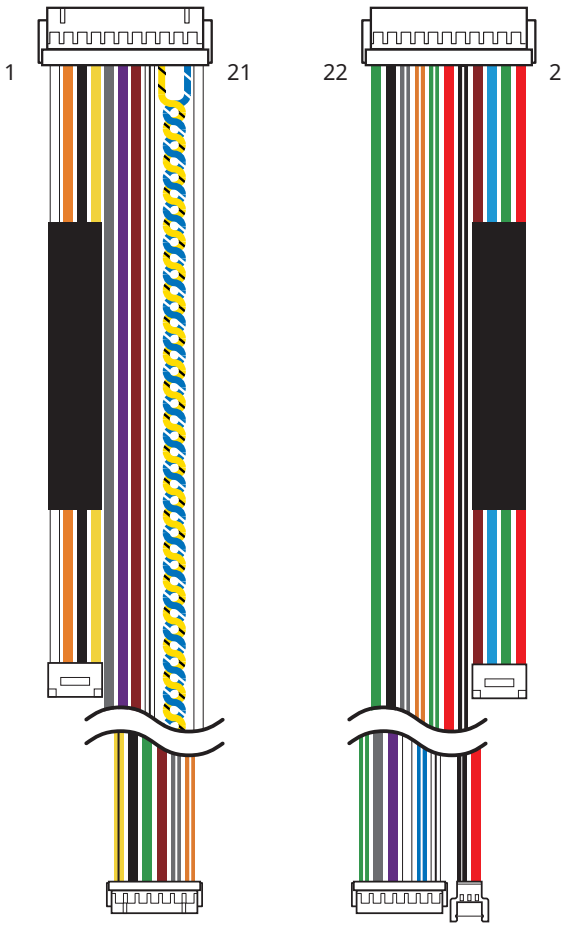

Cable	Terminal	Nombre	Color
RJ-45 (Ethernet + PoE)	1	ENET TXP	Blanco
	3	ENET TXN	Naranja
	5	ENET RXP	Negro
	7	ENET RXN	Amarillo
Entradas	9	INPUT GND	Gris
	11	INPUT0	Púrpura
	13	INPUT1	Marrón
RS-485	15	485 GND	Blanco (Rayas negras)
	17	485 TRXN	Amarillo (Rayas negras)
	19	485 TRXP	Azul (Rayas blancas)
Wiegand	21	WG D1	Blanco
	22	WG D0	Verde
	20	WG GND	Negro
Relé	18	RLY NO	Gris (Rayas blancas)
	16	RLY NC	Naranja (Rayas blancas)
	14	RLY COM	Verde (Rayas blancas)
Alimentación	12	PWR +VDC	Rojo
	10	PWR GND	Negro (Rayas blancas)
RJ-45 (Ethernet + PoE)	8	VB2	Marrón
	6	VB2	Azul
	4	VB1	Verde
	2	VB1	Rojo

Nota para el uso de código QR o de barras y licencia del dispositivo

Puede enviarle un código QR o código de barras a un usuario y utilizarlo como método de autenticación. Escanee el código QR o código de barras correctamente, siguiendo las instrucciones en la pantalla, para aumentar la tasa de reconocimiento.

Cómo escanear un código QR o de barras

XS2-QDPB, XS2-QAPB

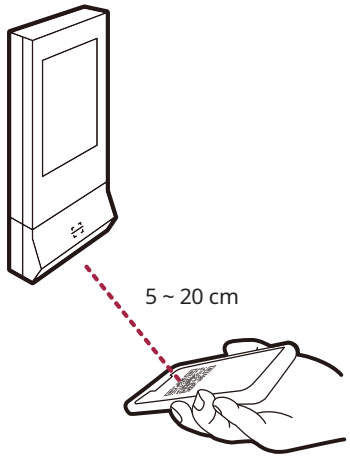

- Mantenga una distancia de 5 a 20 cm entre la unidad de autenticación de código de barras/QR del dispositivo y el código de barras/QR.
- Sostenga el teléfono inteligente con la pantalla mirando hacia la unidad de autenticación del código de barras/QR y coloque el haz de guía en el centro del código QR.
- Cuando autentique con el código QR o el código de barras descargado en su teléfono inteligente, ajuste el brillo del teléfono para que el dispositivo pueda leer claramente el código QR o el código de barras.
- Si no sigue las instrucciones que aparecen en la pantalla, puede tardar mucho tiempo en escanear el código QR o de barras, o puede fallar.

XS2-DPB, XS2-APB

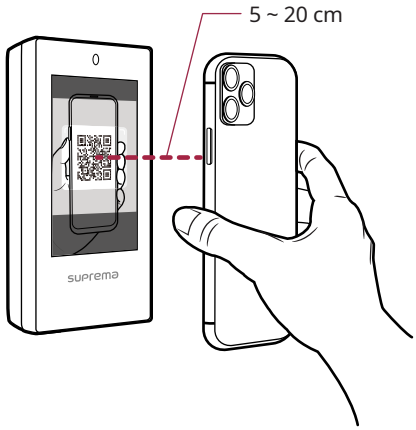

- Mantenga una distancia de entre 5 y 20 cm entre la cámara del dispositivo y el código QR o de barras.
- Coloque el código QR o de barras en el centro de la pantalla de escaneo del dispositivo.
- Cuando realice una autenticación con el código QR o de barras descargado en su teléfono inteligente, ajuste el brillo del teléfono para que el dispositivo pueda leer claramente el código QR o de barras.
- Si no sigue las instrucciones que aparecen en la pantalla, puede tardar mucho tiempo en escanear el código QR o de barras, o puede fallar.

Notas para la licencia del dispositivo

- El uso de la autenticación por código QR o de barras requiere una licencia de dispositivo independiente. Comuníquese con el lugar de compra para emitir una licencia de dispositivo.
- El archivo de licencia del dispositivo es un archivo cifrado y no se puede modificar arbitrariamente.
- Las licencias del dispositivo se emiten en función de la identificación del dispositivo. Si la identificación del dispositivo se cambia de manera inusual, no se proporciona el servicio de garantía para la licencia.

Instalación

Fijación del soporte y del producto

- En este documento, se describe el método de instalación de los modelos XS2-QDPB, XS2-QAPB. Instale los modelos XS2-DPB, XS2-APB de la misma manera.

1 Determine la posición correcta para instalar el soporte mediante la plantilla de taladrado que se proporciona. Fije firmemente el soporte con tornillos de fijación a través de él, hasta la posición en la que va a instalar la X-Station 2.

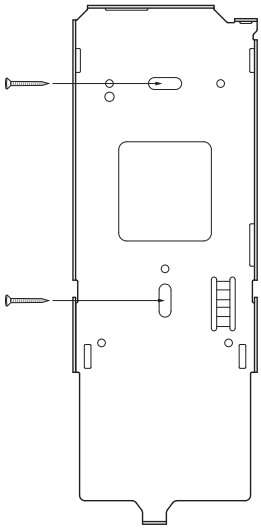

- Si se instala la X-Station 2 en una pared de concreto, perfore orificios, inserte los anclajes PVC y fíjelos con los tornillos de fijación.
- Para evitar interferencias de RF, se debe mantener una distancia mínima de separación.

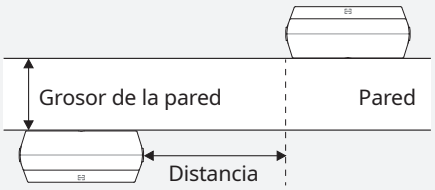

Grosor de la pared	Distancia
100 mm	500 mm
120 mm	400 mm
150 mm	300 mm

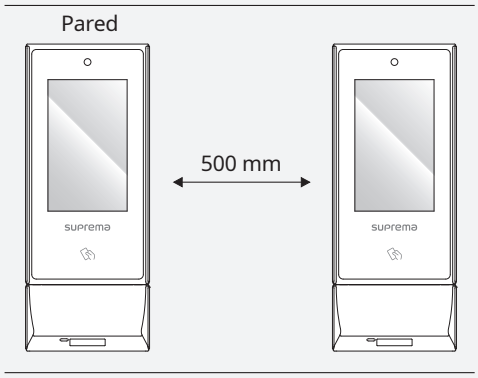

- Cuando utilice una tarjeta de acceso móvil, realice la instalación de los dispositivos con una distancia mínima de 1 m entre ellos para evitar interferencia de RF.

2 Monte la cubierta del cable e instale X-Station 2 en el soporte que fijó.

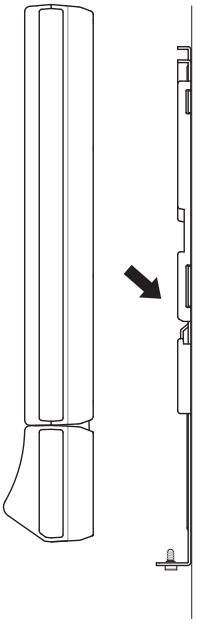

3 Conecte X-Station 2 al soporte: gire el tornillo de fijación del producto de X-Station 2.

Conexión a la fuente de alimentación

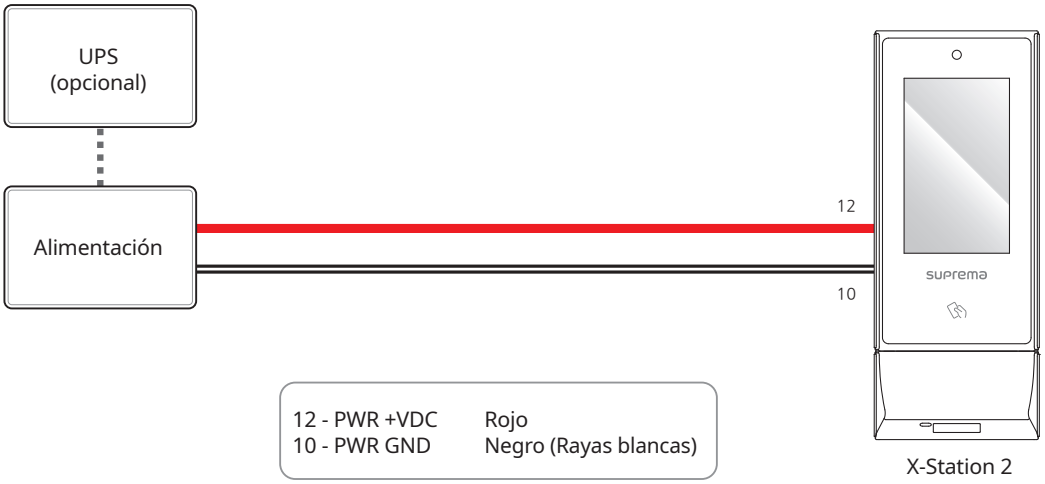

- Utilice un adaptador de alimentación aprobado por IEC/EN 62368-1 que admita un consumo de energía superior al del producto. Si desea conectar y utilizar otro dispositivo con la misma fuente de alimentación, debe utilizar un adaptador con una capacidad de corriente igual o superior al consumo total de energía necesario para el terminal y el otro dispositivo.
  - Consulte Alimentación en las especificaciones del producto para conocer las especificaciones de consumo máximo de corriente.
- NO extienda la longitud del cable de alimentación cuando utilice el adaptador de alimentación.
- Utilice una fuente de alimentación independiente para el Secure I/O 2, la cerradura eléctrica y el producto, respectivamente. Si conecta y utiliza la misma fuente de alimentación para estos dispositivos, podrían funcionar incorrectamente.
- NO conecte el dispositivo a la fuente de alimentación de CC (o al adaptador) y a la fuente de alimentación PoE al mismo tiempo.

Conexión de red

TCP/IP

Conexión LAN (conexión a un concentrador)

Puede conectar el producto a un concentrador mediante un cable CAT-5 de tipo general.

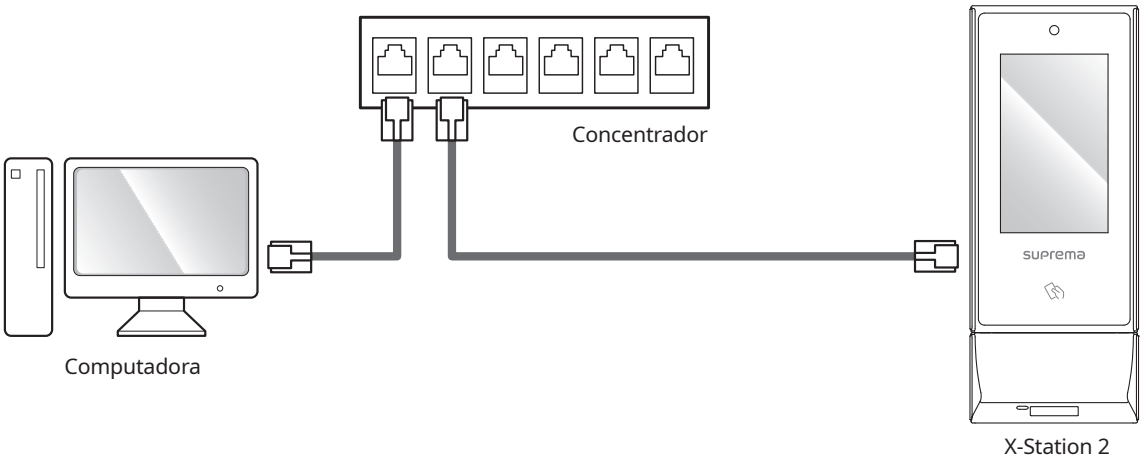

Conexión LAN (conexión directa a una computadora)

X-Station 2 tiene una función MDI/MDIX automática para que se pueda conectar directamente a una computadora mediante un cable recto normal tipo CAT-5 o un cable cruzado.

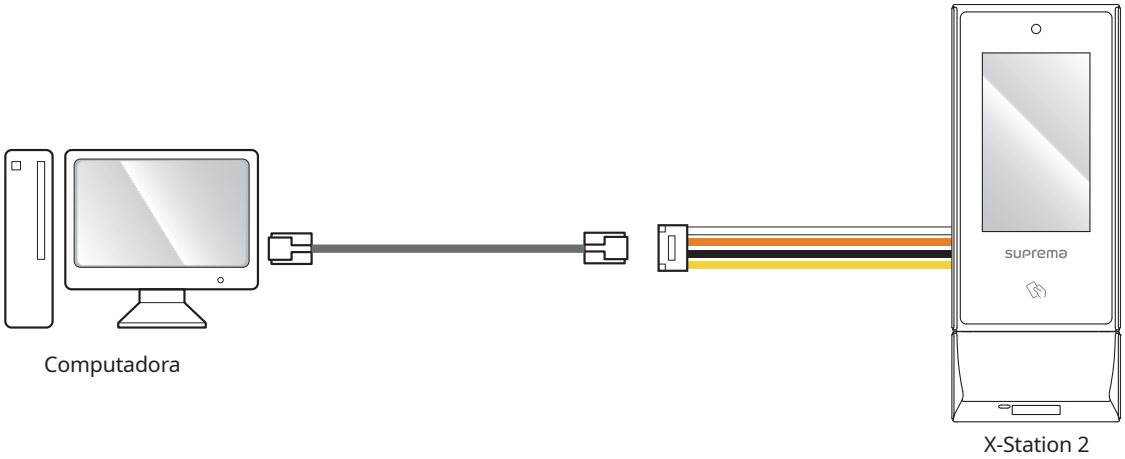

Conexión Entradas

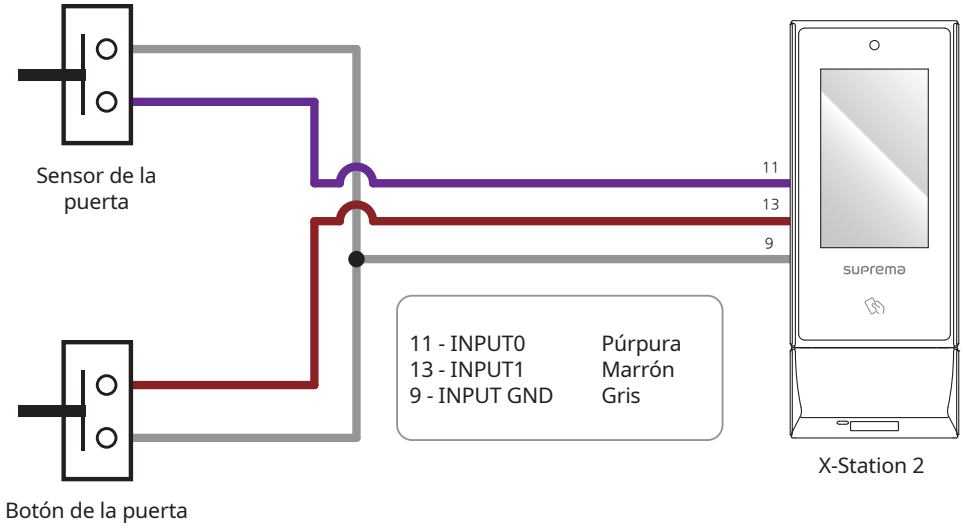

Conexión del Relé

Bloqueo a prueba de fallas

Para utilizar el bloqueo a prueba de fallas, conecte el contacto normalmente cerrado como se muestra en la figura siguiente. Normalmente, hay una corriente que fluye a través del relé para el bloqueo a prueba de fallas. Cuando el relé se activa, bloqueando el flujo de corriente, la puerta se abrirá. Si la fuente de alimentación del producto se corta debido a una falla de la alimentación o a un factor externo, la puerta se abre.

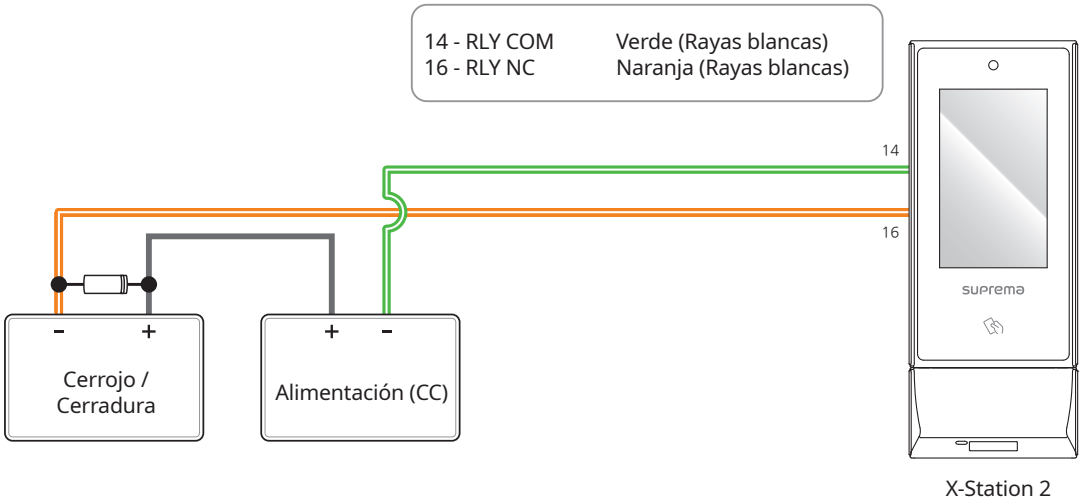

- Instale un diodo a ambos lados de las conexiones de la cerradura de la puerta como se muestra en la figura para proteger el contacto de la corriente inversa, que se produce cuando la cerradura opera.
- Utilice una fuente de alimentación independiente para X-Station 2 y la cerradura de la puerta.
- Para mayor comodidad, los lectores inteligentes autónomos de Suprema contienen relés internos que pueden bloquear o desbloquear directamente las puertas sin controladores externos Sin embargo, para las aplicaciones de control de acceso que necesitan más seguridad, NO se recomienda utilizar el relé interno de un lector para evitar cualquier ataque de manipulación que pueda activar el desbloqueo de la puerta. Para dichas aplicaciones, se recomienda encarecidamente utilizar una unidad de contacto independiente para un control de bloqueo, como los Secure I/O 2, DM-20 o CoreStation de Suprema instalados del lado seguro de la puerta.

- Tenga cuidado con la dirección de instalación del diodo. Instale el diodo cerca de la cerradura de la puerta.

Bloqueo seguro contra fallas

Para utilizar el bloqueo seguro contra fallas, conecte el contacto normalmente abierto como se muestra en la figura siguiente. Normalmente no hay flujo de corriente a través del relé para el bloqueo seguro contra fallas. Cuando el relé activa el flujo de corriente, la puerta se abre. Si la fuente de alimentación del producto se corta debido a una falla de la alimentación o a un factor externo, la puerta se bloquea.

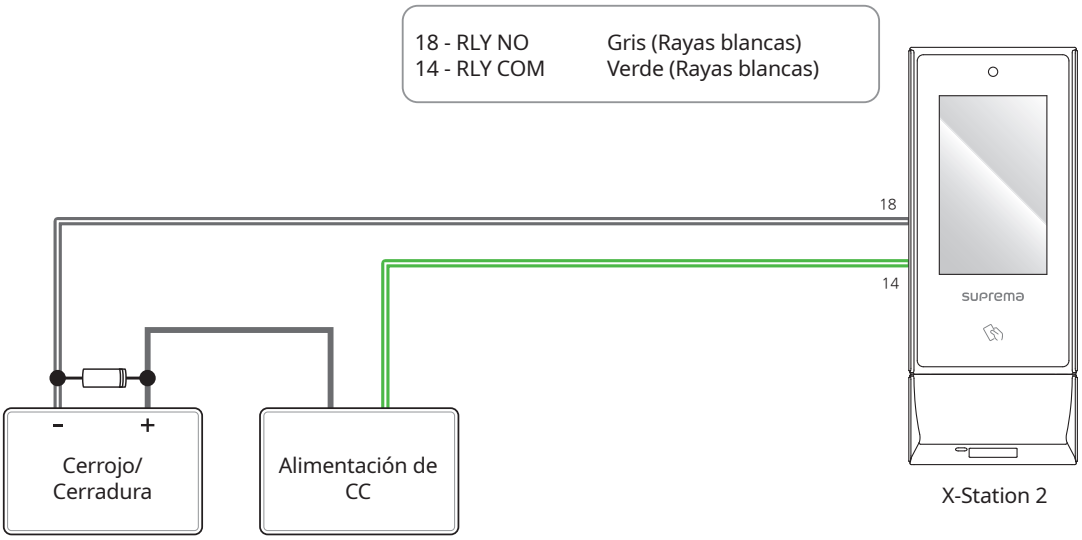

- Instale un diodo a ambos lados de las conexiones de la cerradura de la puerta como se muestra en la figura para proteger el contacto de la corriente inversa, que se produce cuando la cerradura opera.
- Utilice una fuente de alimentación independiente para X-Station 2 y la cerradura de la puerta.
- Para mayor comodidad, los lectores inteligentes autónomos de Suprema contienen relés internos que pueden bloquear o desbloquear directamente las puertas sin controladores externos. Sin embargo, para las aplicaciones de control de acceso que necesitan más seguridad, NO se recomienda utilizar el relé interno de un lector para evitar cualquier ataque de manipulación que pueda activar el desbloqueo de la puerta. Para dichas aplicaciones, se recomienda encarecidamente utilizar una unidad de contacto independiente para un control de bloqueo, como los Secure I/O 2, DM-20 o CoreStation de Suprema instalados del lado seguro de la puerta.

- Tenga cuidado con la dirección de instalación del diodo. Instale el diodo cerca de la cerradura de la puerta.

Conexión de puerta automática

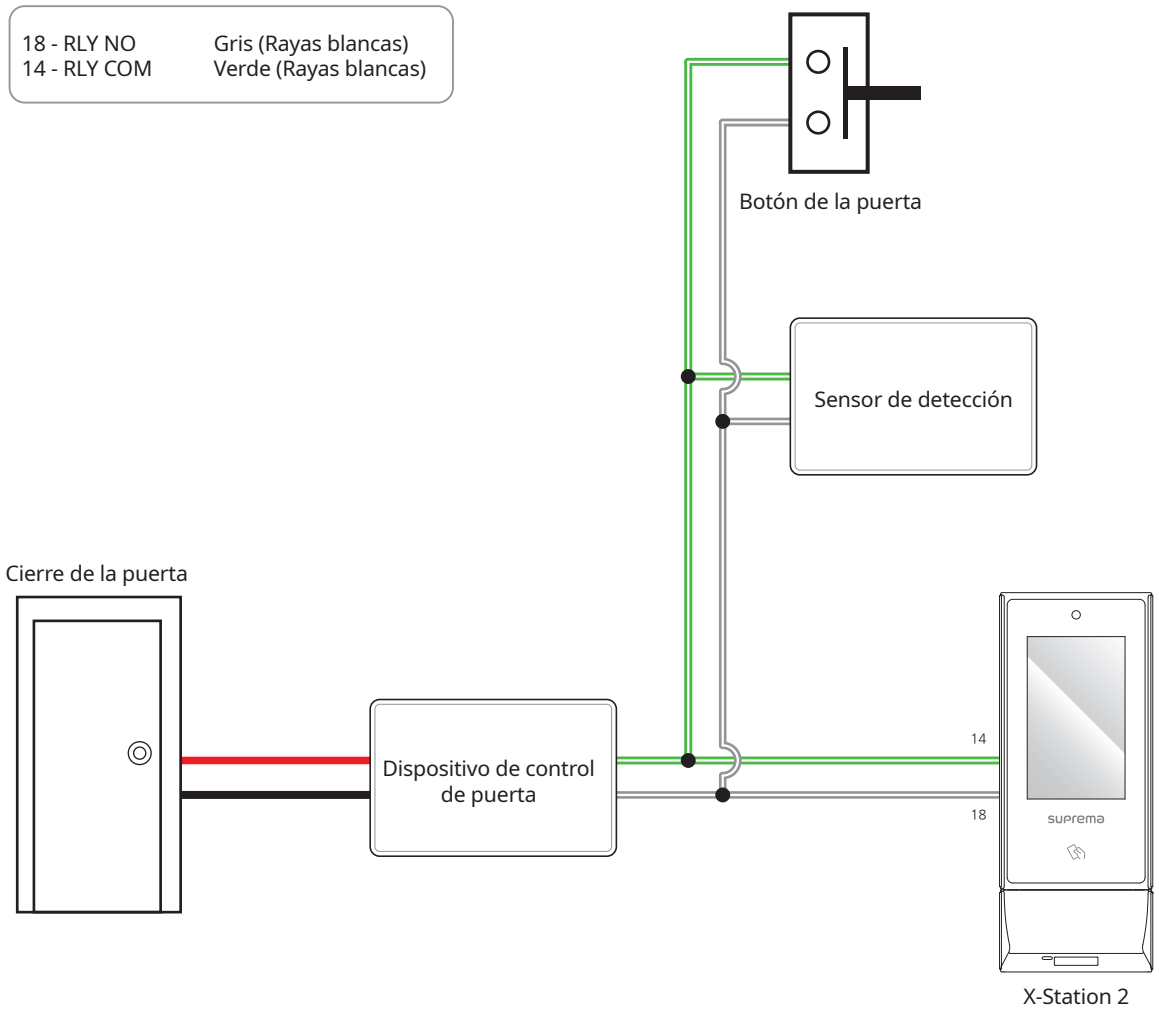

Conexión autónoma (Standalone)

X-Station 2 se puede conectar directamente a la cerradura de la puerta, al botón de la puerta y al sensor de la puerta sin conectar un dispositivo de E/S independiente.

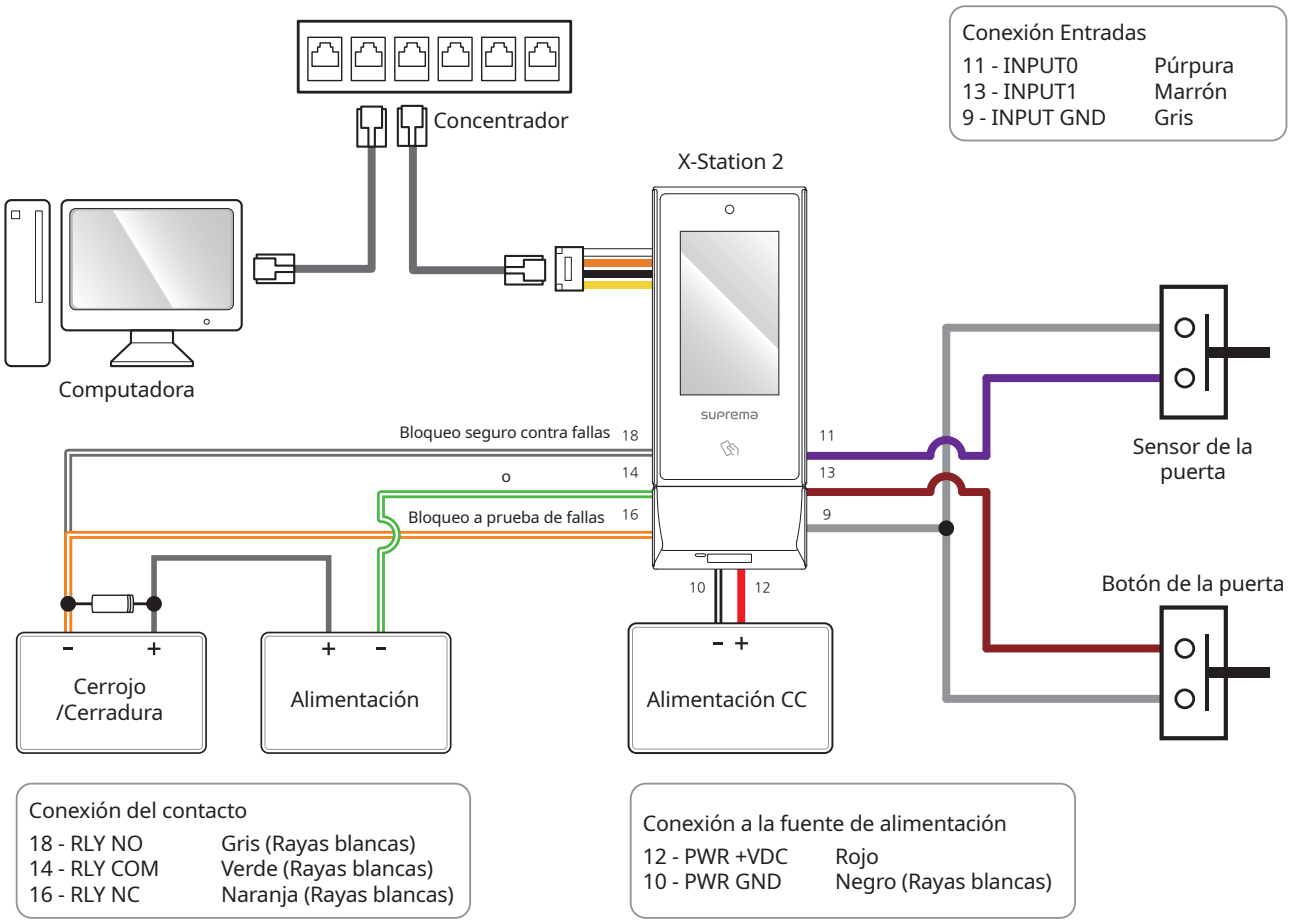

- Para mayor comodidad, los lectores inteligentes autónomos de Suprema contienen relés internos que pueden bloquear o desbloquear directamente las puertas sin controladores externos. Sin embargo, para las aplicaciones de control de acceso que necesitan más seguridad, NO se recomienda utilizar el relé interno de un lector para evitar cualquier ataque de manipulación que pueda activar el desbloqueo de la puerta. Para dichas aplicaciones, se recomienda encarecidamente utilizar una unidad de contacto independiente para un control de bloqueo, como los Secure I/O 2, DM-20 o CoreStation de Suprema instalados del lado seguro de la puerta.

- X-Station 2 se puede utilizar para controlar varias puertas con dispositivos esclavos, a través de RS485. Los dispositivos esclavos se utilizan solamente como lectores y la autenticación se realiza en el dispositivo maestro.
- Para obtener más información, comuníquese con el equipo de asistencia técnica de Suprema (support.supremainc.com).

Conexión a Secure I/O 2

Secure I/O 2 es un dispositivo de E/S que se puede conectar a X-Station 2 con un cable RS-485. Con este dispositivo se puede mantener la seguridad incluso si se pierde la conexión entre X-Station 2 y Secure I/O 2, o si se apagó la fuente de poder de X-Station 2 debido a factores externos.

- Utilice un par trenzado AWG24 con una longitud máxima de 1.2 km para el cable RS-485.
- Si se enlaza con una conexión en cadena RS-485, conecte una resistencia de terminación (120 Ω) a ambos extremos de la conexión. Si la conexión se realiza a la lmitad de la línea, el nivel de la señal se reducirá y el rendimiento de las comunicaciones se deteriorará. Asegúrese de realizar la conexión en ambos extremos del enlace en cadena.

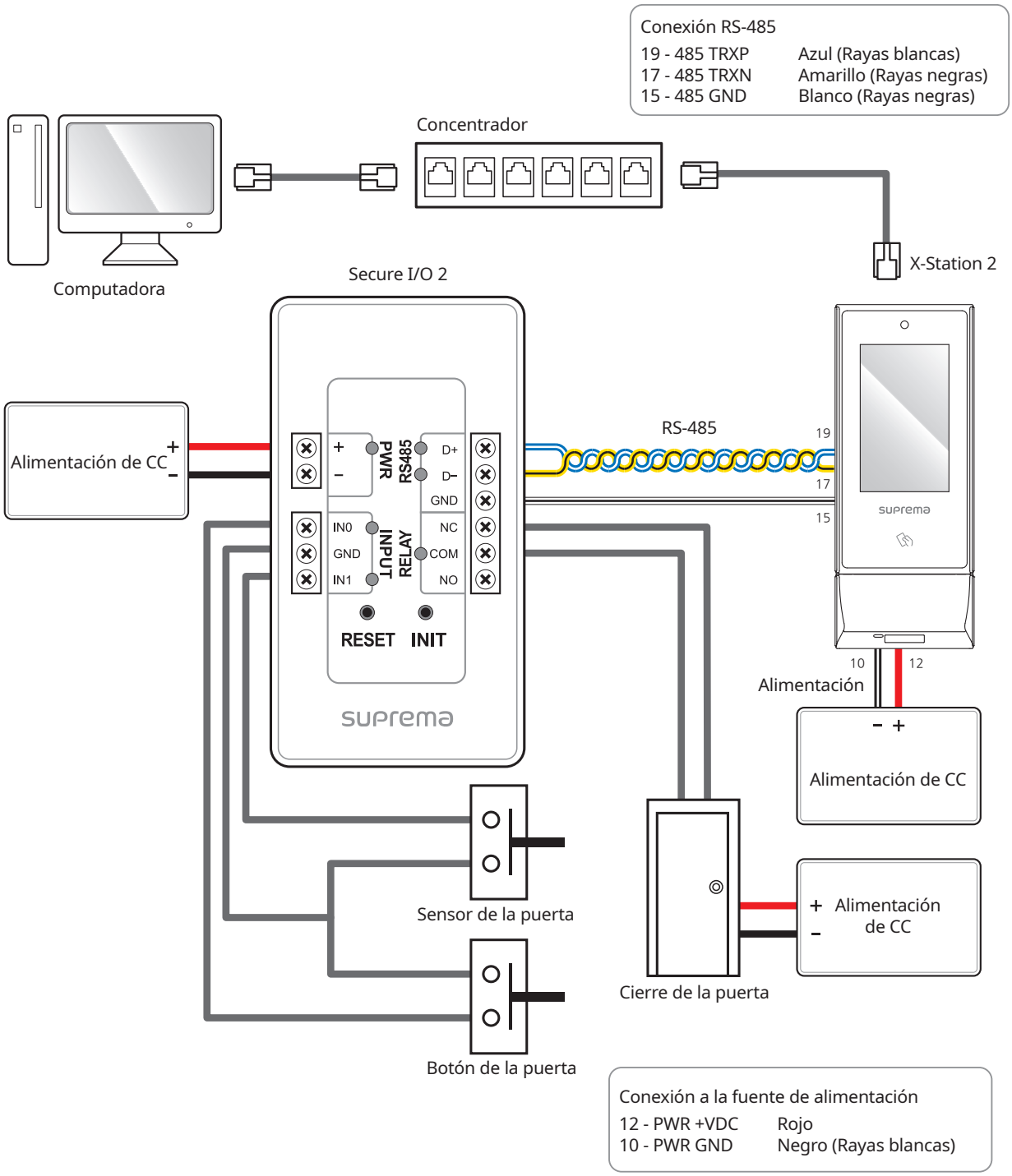

- X-Station 2 se puede utilizar para controlar varias puertas con dispositivos esclavos, a través de RS485. Los dispositivos esclavos se utilizan solamente como lectores y la autenticación se realiza en el dispositivo maestro.
- Para obtener más información, comuníquese con el equipo de asistencia técnica de Suprema (support.supremainc.com).

Conexión Wiegand

Utilizar como dispositivo de entrada o salida Wiegand

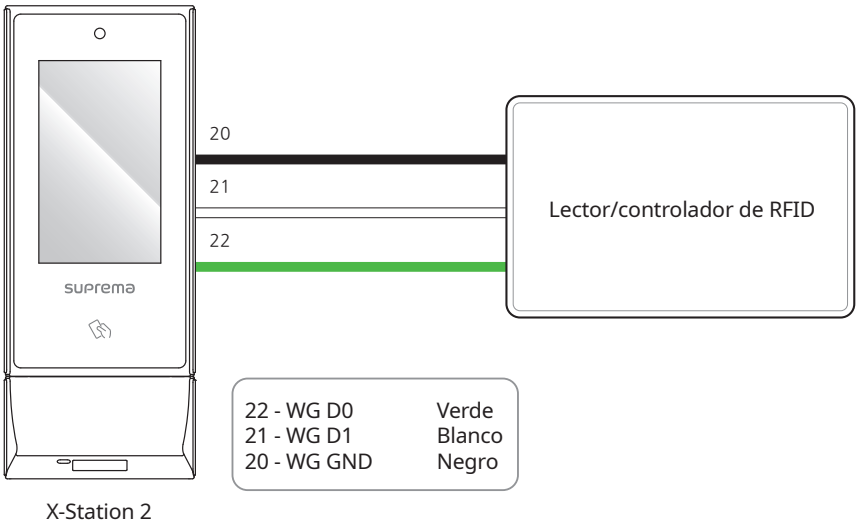

Especificaciones del producto

Categoría	Característica	Especificación
Credencial	Opción de RF	• **XS2-QDPB**, **XS2-DPB**: 125kHz EM & 13.56MHz MIFARE, MIFARE Plus, DESFire, DESFire EV1/EV2/EV3[1], FeliCa • **XS2-QAPB**, **XS2-APB**: 125kHz EM, HID Prox & 13.56MHz MIFARE, MIFARE Plus, DESFire, DESFire EV1/EV2/EV3[1], FeliCa, iCLASS SE/SR/Seos
	Rango de lectura de RF[2]	EM/HID Prox/MIFARE/DESFire/HID iCLASS: 50 mm, Felica: 30 mm
	Móvil	NFC, BLE
	Teclado codificado (PIN)	Compatible
	Código QR/Código de barras[3]	• **XS2-QDPB**, **XS2-QAPB**: Compatible • **XS2-DPB**, **XS2-APB**: Compatible[4]
General	CPU	1.5 GHz Quad Core
	Memoria	Memoria flash de 16 GB + RAM de 1 GB
	Chip criptográfico	Compatible
	Pantalla	LCD en color IPS 4"
	Resolución de pantalla	480 x 800 píxeles
	Sonido	24 bits
	Temperatura de funcionamiento	De -20°C a 50°C
	Temperatura de almacenamiento	De -40°C a 70°C
	Operación en humedad	De 0 % a 80 %, sin condensación
	Humedad en almacenamiento	De 0 % a 90 %, sin condensación
	Tipo de cámara	CMOS de 2M píxeles
	Resolución de la cámara	1600 x 1200 píxeles
	Dimensión (ancho x alto x largo)	• **XS2-QDPB**, **XS2-QAPB**: 82 x 203 x 33.9 (mm) • **XS2-DPB**, **XS2-APB**: 82 x 159 x 25.9 (mm)
	Peso	Dispositivo • **XS2-QDPB**, **XS2-QAPB**: 343 g • **XS2-DPB**, **XS2-APB**: 280 g Soporte central • **XS2-QDPB**, **XS2-QAPB**: 88 g (incluye arandela y tornillo) • **XS2-DPB**, **XS2-APB**: 67 g (incluye arandela y tornillo)
	Clasificación IP	IP65
	Certificaciones	CE, UKCA, KC, FCC, IC, RCM, BIS, ANATEL, SIG, TELEC, RoHS, REACH, WEEE
Capacidad	Usuarios máx.	500,000[5]
	Máximo de credenciales (1:1)	• Tarjeta: 500,000 • PIN: 500,000
	Máximo de registro de eventos	5,000,000
	Registro de imágenes máximo	50,000

Categoría	Característica	Especificación
Interfaz	Ethernet	Compatible (10/100 Mbps, MDI/MDI-X automática)
	Protocolo de red	TCP, UDP
	RS-485	1 ch Maestro ó Esclavo (Seleccionable)
	Protocolo de comunicación RS-485	Compatible con OSDP V2
	Wiegand	1 ch Entrada ó Salida (Seleccionable)
	Entradas	Entradas de 2 canales
	Relé	1 Relé
	USB	USB 2.0 (Maestro)
	PoE	Compatible (compatible con IEEE 802.3af)
	Seguro contra alteraciones (Tamper)	Compatible
Eléctrica	Alimentación	• Voltaje: 12 Vdc • Corriente: Máx. 0.8 A
		• Voltaje: 24 Vdc • Corriente: Máx. 0.5 A
	Interruptor entrada VIH	• Min.: 3 V • Max.: 5 V
	Interruptor entrada VIL	Max.: 1 V
	Interruptor de resistencia de polarización	4.7 kΩ (Los puertos de entrada están polarizados con 4.7 kΩ).
	Salida Wiegand VOH	Más de 4.8 V
	Salida Wiegand VOL	Menos de 0.2 V
	Resistencia de polarización de la salida Wiegand	Polarización interna de 1 kΩ
	Relé	Carga resistiva de 2 A a 30 VCC Carga inductiva de 1 A a 30 VCC

1) Las tarjetas DESFire EV2/EV3 se pueden usar con tarjetas de compatibilidad retroactiva de DESFire EV1. Las funciones de CSN y de tarjeta inteligente son compatibles con X-Station 2.
2) El rango de lectura de RF varía según el entorno de instalación.
3) Admite códigos QR o de barras compuestos por hasta 32 cadenas de códigos ASCII.
4) Requiere una licencia independiente.
5) La cantidad de usuarios registrados sin tener datos de credenciales.

Dimensiones

XS2-QDPB, XS2-QAPB

(Unidad: mm)

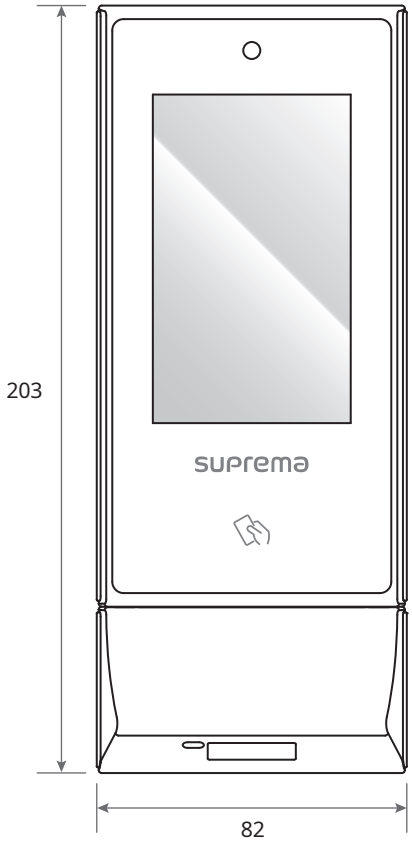

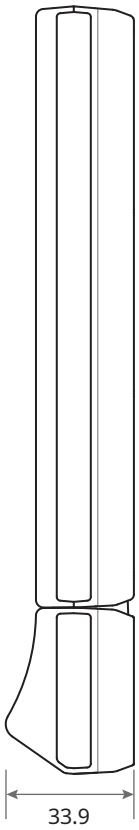

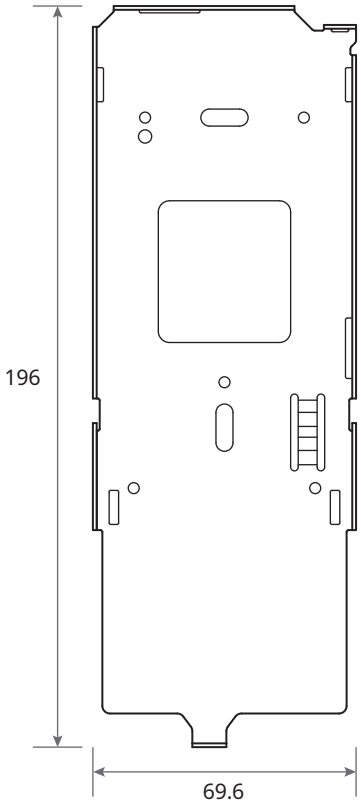

XS2-DPB, XS2-APB

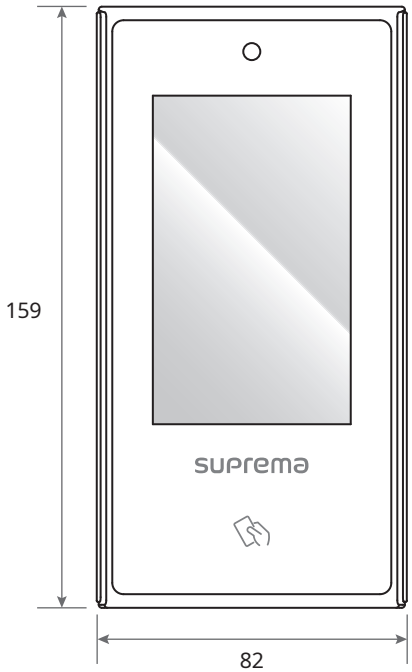

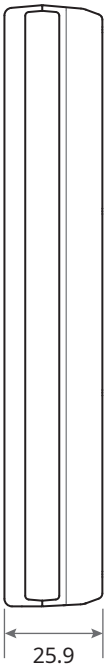

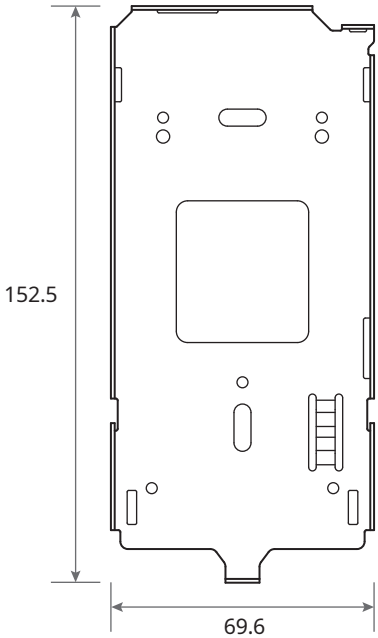

Información de cumplimiento de la FCC

ESTE DISPOSITIVO CUMPLE CON LA PARTE 15 DEL REGLAMENTO DE LA FCC.

El funcionamiento está sujeto a las siguientes dos condiciones:

(1) Este dispositivo no puede causar interferencia perjudicial, y

(2) Este dispositivo debe aceptar cualquier interferencia recibida, incluidas las interferencias que puedan causar un funcionamiento no deseado.

Este equipo ha sido probado y cumple con los límites para un dispositivo digital Clase A, en conformidad con la parte 15 del reglamento de la FCC. Estos límites están diseñados para proporcionar una protección razonable contra la interferencia perjudicial en una instalación residencial. Este equipo genera, utiliza y puede irradiar energía de radiofrecuencia y, si no se instala y utiliza de acuerdo con las instrucciones, podría causar interferencias perjudiciales en las comunicaciones de radio. Sin embargo, no hay garantía de que no se produzcan interferencias en una instalación determinada. Si este equipo causa interferencia perjudicial en la recepción de radio o televisión, lo que se puede determinar apagando y encendiendo el equipo, se recomienda al usuario que intente corregir la interferencia mediante una o varias de las siguientes medidas:

- Reoriente o reubique la antena receptora.
- Aumente la separación entre el equipo y el receptor.
- Conecte el equipo a una toma de corriente de un circuito distinto al que está conectado el receptor.
- Consulte al distribuidor o a un técnico experimentado en radio/televisión para obtener ayuda.

Las modificaciones no aprobadas expresamente por el fabricante podrían anular la autoridad del usuario para hacer funcionar el equipo de acuerdo con el reglamento de la FCC.

- Este aparato y su antena no se deben ubicar juntos ni se deben operar junto con otras antenas o transmisores.
- Se debe mantener una distancia mínima de separación de 20 cm entre la antena y las personas para que el aparato cumpla con los requisitos de exposición a RF.

Declaración de conformidad de la UE (CE)

Este producto tiene la marca CE de acuerdo con las disposiciones de Radio Equipment Directive (RED) 2014/53/UE. Por la presente, Suprema Inc. declara que este producto cumple los requisitos esenciales y otras disposiciones pertinentes de Radio Equipment Directive (RED) 2014/53/UE.

- Energía de transmisión Bluetooth: -0.1 dBm
- Frecuencia de Bluetooth: 2402~2480 MHz
- Frecuencia de NFC: 13.56 MHz
- Frecuencia de RFID: 13.56 MHz + 125 kHz

Para obtener más información, comuníquese con nosotros mediante la siguiente información de contacto.

Suprema Inc.
Sitio web: https://www.supremainc.com
Dirección: 17F Parkview Tower, 248, Jeongjail-ro, Bundang- gu, Seongnam-si, Gyeonggi-do, 13554, Rep. of KOREA
Teléfonos: +82-31-783-4502 / Fax: +82-31-783-4503

Apéndices

Descargo de responsabilidad general de Suprema

- La información de este documento se proporciona en relación con los productos de Suprema.
- El derecho de uso se reconoce solo para los productos de Suprema incluidos en los términos y condiciones de uso o venta de dichos productos garantizados por Suprema. Por este documento no se otorga ninguna licencia, expresa o implícita, por impedimento legal o de otro medio, para ningún tipo de propiedad intelectual.
- Salvo que se indique expresamente en un acuerdo entre usted y Suprema, Suprema no asume responsabilidad alguna y Suprema se exime de todas las garantías, expresas o implícitas, incluidas, entre otras, las relacionadas con la idoneidad para un propósito particular, comerciabilidad o no infracción.
- Todas las garantías se ANULAN si los productos de Suprema han sido: 1) instalados incorrectamente o si se quitaron o modificaron los números de serie, la fecha de garantía o las etiquetas de garantía de calidad en el hardware; 2) utilizados de una manera que no sea autorizada por Suprema; 3) modificados, alterados o reparados por una parte que no sea Suprema o una persona autorizada por Suprema; u 4) operados o mantenidos en condiciones de entorno inadecuadas.
- Los productos de Suprema no están diseñados para su uso en aplicaciones médicas, de salvamento, de soporte vital u otras aplicaciones en las que la falla del producto de Suprema podría crear una situación en la que se puede producir una lesión personal o la muerte. Si compra o utiliza productos de Suprema para cualquier aplicación no autorizada o no intencional, deberá indemnizar y eximir a Suprema y sus funcionarios, empleados, subsidiarias, filiales y distribuidores de responsabilidad ante cualquier reclamo, costo, daño y gasto, y los honorarios razonables de abogados que surjan, directa o indirectamente, de cualquier reclamación de lesión personal o muerte asociada con dicho uso no autorizado o no deseado, incluso si dicha reclamación alega que Suprema fue negligente con respecto al diseño o la fabricación de la pieza.
- Suprema se reserva el derecho de realizar cambios en las especificaciones y descripciones de los productos en cualquier momento sin previo aviso para mejorar la confiabilidad, la función o el diseño.
- La información personal, en forma de mensajes de autenticación y otra información relativa, puede almacenarse dentro de productos de Suprema durante su uso. Suprema no se hace responsable de ninguna información, incluida la información personal, almacenada en los productos de Suprema que no se encuentre bajo el control directo de Suprema o según lo establecido en los términos y condiciones pertinentes. Cuando se utiliza cualquier información almacenada, incluida la información personal, es responsabilidad de los usuarios del producto cumplir con la legislación nacional correspondiente y garantizar un manejo y un procesamiento adecuado.
- No debe basarse en la ausencia o las características de ninguna función o instrucción marcada como "reservada" o "no definida". Suprema se reserva estos para su definición futura y no tendrá ninguna responsabilidad de ningún tipo por conflictos o incompatibilidades que surjan de cambios futuros en ellos.
- Salvo que se establezca expresamente en el presente, en la medida máxima permitida por la ley, los productos de Suprema se venden "tal cual".
- Comuníquese con la oficina de ventas de local de Suprema o con su distribuidor para obtener las especificaciones más recientes y antes de realizar el pedido del producto.

Aviso de derechos de autor

El derecho de autor de este documento está depositado en Suprema. Los derechos de otros nombres de productos, marcas comerciales y marcas registradas pertenecen a los titulares de dichos derechos, se trate de individuos u organizaciones.

Licencia de código abierto

- El software de este producto se basa en "Linux Kernel 4.x", el cual se encuentra bajo licencia de GPL. Respecto de GPL, consulte la GNU General Public License en este manual.
- Este producto utiliza "BoringSSL", que cuenta con licencias de OpenSSL y Original SSLeay. Respecto de las licencias OpenSSL y Original SSLeay, consulte la BoringSSL License en este manual.
- Este producto utiliza "Original SSLeay", que cuenta con licencia de Original SSLeay. Respecto de las licencias Original SSLeay, consulte la Original SSLeay License en este manual.
- Este producto utiliza la “AOSP”, que cuenta con licencia de Apache 2.0. Respecto de la licencia Apache 2.0, consulte la Apache License en este manual.
- Para solicitar el código fuente modificado basado en el kernel 4.x de Linux y el código fuente de BoringSSL, Original SSLeay y AOSP, que se incluye en este producto, escríbanos a support.supremainc.com.

GNU General Public License

Version 3, 29 June 2007

Copyright © 2007 Free Software Foundation, Inc. <https://fsf.org/>

Everyone is permitted to copy and distribute verbatim copies of this license document, but changing it is not allowed.

Preamble

The GNU General Public License is a free, copyleft license for software and other kinds of works.

The licenses for most software and other practical works are designed to take away your freedom to share and change the works. By contrast, the GNU General Public License is intended to guarantee your freedom to share and change all versions of a program--to make sure it remains free software for all its users. We, the Free Software Foundation, use the GNU General Public License for most of our software; it applies also to any other work released this way by its authors. You can apply it to your programs, too.

When we speak of free software, we are referring to freedom, not price. Our General Public Licenses are designed to make sure that you have the freedom to distribute copies of free software (and charge for them if you wish), that you receive source code or can get it if you want it, that you can change the software or use pieces of it in new free programs, and that you know you can do these things.

To protect your rights, we need to prevent others from denying you these rights or asking you to surrender the rights. Therefore, you have certain responsibilities if you distribute copies of the software, or if you modify it: responsibilities to respect the freedom of others.

For example, if you distribute copies of such a program, whether gratis or for a fee, you must pass on to the recipients the same freedoms that you received. You must make sure that they, too, receive or can get the source code. And you must show them these terms so they know their rights.

Developers that use the GNU GPL protect your rights with two steps: (1) assert copyright on the software, and (2) offer you this License giving you legal permission to copy, distribute and/or modify it.

For the developers' and authors' protection, the GPL clearly explains that there is no warranty for this free software. For both users' and authors' sake, the GPL requires that modified versions be marked as changed, so that their problems will not be attributed erroneously to authors of previous versions.

Some devices are designed to deny users access to install or run modified versions of the software inside them, although the manufacturer can do so. This is fundamentally incompatible with the aim of protecting users' freedom to change the software. The systematic pattern of such abuse occurs in the area of products for individuals to use, which is precisely where it is most unacceptable. Therefore, we have designed this version of the GPL to prohibit the practice for those products. If such problems arise substantially in other domains, we stand ready to extend this provision to those domains in future versions of the GPL, as needed to protect the freedom of users.

Finally, every program is threatened constantly by software patents. States should not allow patents to restrict development and use of software on general-purpose computers, but in those that do, we wish to avoid the special danger that patents applied to a free program could make it effectively proprietary. To prevent this, the GPL assures that patents cannot be used to render the program non-free.

The precise terms and conditions for copying, distribution and modification follow.

TERMS AND CONDITIONS

0. Definitions.

“This License” refers to version 3 of the GNU General Public License.

“Copyright” also means copyright-like laws that apply to other kinds of works, such as semiconductor masks.

“The Program” refers to any copyrightable work licensed under this License. Each licensee is addressed as “you”. “Licensees” and “recipients” may be individuals or organizations.

To “modify” a work means to copy from or adapt all or part of the work in a fashion requiring copyright permission, other than the making of an exact copy. The resulting work is called a “modified version” of the earlier work or a work “based on” the earlier work.

A “covered work” means either the unmodified Program or a work based on the Program.

To “propagate” a work means to do anything with it that, without permission, would make you directly or secondarily liable for infringement under applicable copyright law, except executing it on a computer or modifying a private copy. Propagation includes copying, distribution (with or without modification), making available to the public, and in some countries other activities as well.

To “convey” a work means any kind of propagation that enables other parties to make or receive copies. Mere interaction with a user through a computer network, with no transfer of a copy, is not conveying.

An interactive user interface displays “Appropriate Legal Notices” to the extent that it includes a convenient and prominently visible feature that (1) displays an appropriate copyright notice, and (2) tells the user that there is no warranty for the work (except to the extent that warranties are provided), that licensees may convey the work under this License, and how to view a copy of this License. If the interface presents a list of user commands or options, such as a menu, a prominent item in the list meets this criterion.

1. Source Code.

The “source code” for a work means the preferred form of the work for making modifications to it. “Object code” means any non-source form of a work.

A “Standard Interface” means an interface that either is an official standard defined by a recognized standards body, or, in the case of interfaces specified for a particular programming language, one that is widely used among developers working in that language.

The “System Libraries” of an executable work include anything, other than the work as a whole, that (a) is included in the normal form of packaging a Major Component, but which is not part of that Major Component, and (b) serves only to enable use of the work with that Major Component, or to implement a Standard Interface for which an implementation is available to the public in source code form. A “Major Component”, in this context, means a major essential component (kernel, window system, and so on) of the specific operating system (if any) on which the executable work runs, or a compiler used to produce the work, or an object code interpreter used to run it.

The “Corresponding Source” for a work in object code form means all the source code needed to generate, install, and (for an executable work) run the object code and to modify the work, including scripts to control those activities. However, it does not include the work's System Libraries, or general-purpose tools or generally available free programs which are used unmodified in performing those activities but which are not part of the work. For example, Corresponding Source includes interface definition files associated with source files for the work, and the source code for shared libraries and dynamically linked subprograms that the work is specifically designed to require, such as by intimate data communication or control flow between those subprograms and other parts of the work.

The Corresponding Source need not include anything that users can regenerate automatically from other parts of the Corresponding Source.

The Corresponding Source for a work in source code form is that same work.

2. Basic Permissions.

All rights granted under this License are granted for the term of copyright on the Program, and are irrevocable provided the stated conditions are met. This License explicitly affirms your unlimited permission to run the unmodified Program. The output from running a covered work is covered by this License only if the output, given its content, constitutes a covered work. This License acknowledges your rights of fair use or other equivalent, as provided by copyright law.

You may make, run and propagate covered works that you do not convey, without conditions so long as your license

otherwise remains in force. You may convey covered works to others for the sole purpose of having them make modifications exclusively for you, or provide you with facilities for running those works, provided that you comply with the terms of this License in conveying all material for which you do not control copyright. Those thus making or running the covered works for you must do so exclusively on your behalf, under your direction and control, on terms that prohibit them from making any copies of your copyrighted material outside their relationship with you.

Conveying under any other circumstances is permitted solely under the conditions stated below. Sublicensing is not allowed; section 10 makes it unnecessary.

3. Protecting Users' Legal Rights From Anti-Circumvention Law.

No covered work shall be deemed part of an effective technological measure under any applicable law fulfilling obligations under article 11 of the WIPO copyright treaty adopted on 20 December 1996, or similar laws prohibiting or restricting circumvention of such measures.

When you convey a covered work, you waive any legal power to forbid circumvention of technological measures to the extent such circumvention is effected by exercising rights under this License with respect to the covered work, and you disclaim any intention to limit operation or modification of the work as a means of enforcing, against the work's users, your or third parties' legal rights to forbid circumvention of technological measures.

4. Conveying Verbatim Copies.

You may convey verbatim copies of the Program's source code as you receive it, in any medium, provided that you conspicuously and appropriately publish on each copy an appropriate copyright notice; keep intact all notices stating that this License and any non-permissive terms added in accord with section 7 apply to the code; keep intact all notices of the absence of any warranty; and give all recipients a copy of this License along with the Program.

You may charge any price or no price for each copy that you convey, and you may offer support or warranty protection for a fee.

5. Conveying Modified Source Versions.

You may convey a work based on the Program, or the modifications to produce it from the Program, in the form of source code under the terms of section 4, provided that you also meet all of these conditions:

a) The work must carry prominent notices stating that you modified it, and giving a relevant date.

b) The work must carry prominent notices stating that it is released under this License and any conditions added under section 7. This requirement modifies the requirement in section 4 to “keep intact all notices”.

c) You must license the entire work, as a whole, under this License to anyone who comes into possession of a copy. This License will therefore apply, along with any applicable section 7 additional terms, to the whole of the work, and all its parts, regardless of how they are packaged. This License gives no permission to license the work in any other way, but it does not invalidate such permission if you have separately received it.

d) If the work has interactive user interfaces, each must display Appropriate Legal Notices; however, if the Program has interactive interfaces that do not display Appropriate Legal Notices, your work need not make them do so.

A compilation of a covered work with other separate and independent works, which are not by their nature extensions of the covered work, and which are not combined with it such as to form a larger program, in or on a volume of a storage or distribution medium, is called an “aggregate” if the compilation and its resulting copyright are not used to limit the access or legal rights of the compilation's users beyond what the individual works permit. Inclusion of a covered work in an aggregate does not cause this License to apply to the other parts of the aggregate.

6. Conveying Non-Source Forms.

You may convey a covered work in object code form under the terms of sections 4 and 5, provided that you also convey the machine-readable Corresponding Source under the terms of this License, in one of these ways:

a) Convey the object code in, or embodied in, a physical product (including a physical distribution medium), accompanied by the Corresponding Source fixed on a durable physical medium customarily used for software interchange.

b) Convey the object code in, or embodied in, a physical product (including a physical distribution medium), accompanied by a written offer, valid for at least three years and valid for as long as you offer spare parts or customer support for that product model, to give anyone who possesses the object code either (1) a copy of the Corresponding Source for all the software in the product that is covered by this License, on a durable physical medium customarily used for software interchange, for a price no more than your reasonable cost of physically performing this conveying of source, or (2) access to copy the Corresponding Source from a network server at no charge.

c) Convey individual copies of the object code with a copy of the written offer to provide the Corresponding Source. This alternative is allowed only occasionally and noncommercially, and only if you received the object code with such an offer, in accord with subsection 6b.

d) Convey the object code by offering access from a designated place (gratis or for a charge), and offer equivalent access to the Corresponding Source in the same way through the same place at no further charge. You need not require recipients to copy the Corresponding Source along with the object code. If the place to copy the object code is a network server, the Corresponding Source may be on a different server (operated by you or a third party) that supports equivalent copying facilities, provided you maintain clear directions next to the object code saying where to find the Corresponding Source. Regardless of what server hosts the Corresponding Source, you remain obligated to ensure that it is available for as long as needed to satisfy these requirements.

e) Convey the object code using peer-to-peer transmission, provided you inform other peers where the object code and Corresponding Source of the work are being offered to the general public at no charge under subsection 6d.

A separable portion of the object code, whose source code is excluded from the Corresponding Source as a System Library, need not be included in conveying the object code work.

A "User Product" is either (1) a "consumer product", which means any tangible personal property which is normally used for personal, family, or household purposes, or (2) anything designed or sold for incorporation into a dwelling. In determining whether a product is a consumer product, doubtful cases shall be resolved in favor of coverage. For a particular product received by a particular user, "normally used" refers to a typical or common use of that class of product, regardless of the status of the particular user or of the way in which the particular user actually uses, or expects or is expected to use, the product. A product is a consumer product regardless of whether the product has substantial commercial, industrial or non-consumer uses, unless such uses represent the only significant mode of use of the product.

"Installation Information" for a User Product means any methods, procedures, authorization keys, or other information required to install and execute modified versions of a covered work in that User Product from a modified version of its Corresponding Source. The information must suffice to ensure that the continued functioning of the modified object code is in no case prevented or interfered with solely because modification has been made.

If you convey an object code work under this section in, or with, or specifically for use in, a User Product, and the conveying occurs as part of a transaction in which the right of possession and use of the User Product is transferred to the recipient in perpetuity or for a fixed term (regardless of how the transaction is characterized), the Corresponding Source conveyed under this section must be accompanied by the Installation Information. But this requirement does not apply if neither you nor any third party retains the ability to install modified object code on the User Product (for example, the work has been installed in ROM).

The requirement to provide Installation Information does not include a requirement to continue to provide support service, warranty, or updates for a work that has been modified or installed by the recipient, or for the User Product in which it has been modified or installed. Access to a network may be denied when the modification itself materially and adversely affects the operation of the network or violates the rules and protocols for communication across the network.

Corresponding Source conveyed, and Installation Information provided, in accord with this section must be in a format that is publicly documented (and with an implementation available to the public in source code form), and must require no special password or key for unpacking, reading or copying.

7. Additional Terms.

"Additional permissions" are terms that supplement the terms of this License by making exceptions from one or more of its conditions. Additional permissions that are applicable to the entire Program shall be treated as though they were included in this License, to the extent that they are valid under applicable law. If additional permissions apply only to part of the Program, that part may be used separately under those permissions, but the entire Program remains governed by this License without regard to the additional permissions.

When you convey a copy of a covered work, you may at your option remove any additional permissions from that copy, or from any part of it. (Additional permissions may be written to require their own removal in certain cases when you modify the work.) You may place additional permissions on material, added by you to a covered work, for which you have or can give appropriate copyright permission.

Notwithstanding any other provision of this License, for material you add to a covered work, you may (if authorized by the copyright holders of that material) supplement the terms of this License with terms:

a) Disclaiming warranty or limiting liability differently from the terms of sections 15 and 16 of this License; or

b) Requiring preservation of specified reasonable legal notices or author attributions in that material or in the Appropriate Legal Notices displayed by works containing it; or

c) Prohibiting misrepresentation of the origin of that material, or requiring that modified versions of such material be marked in reasonable ways as different from the original version; or

d) Limiting the use for publicity purposes of names of licensors or authors of the material; or

e) Declining to grant rights under trademark law for use of some trade names, trademarks, or service marks; or

f) Requiring indemnification of licensors and authors of that material by anyone who conveys the material (or modified versions of it) with contractual assumptions of liability to the recipient, for any liability that these contractual assumptions directly impose on those licensors and authors.

All other non-permissive additional terms are considered “further restrictions” within the meaning of section 10. If the Program as you received it, or any part of it, contains a notice stating that it is governed by this License along with a term that is a further restriction, you may remove that term. If a license document contains a further restriction but permits relicensing or conveying under this License, you may add to a covered work material governed by the terms of that license document, provided that the further restriction does not survive such relicensing or conveying.

If you add terms to a covered work in accord with this section, you must place, in the relevant source files, a statement of the additional terms that apply to those files, or a notice indicating where to find the applicable terms.

Additional terms, permissive or non-permissive, may be stated in the form of a separately written license, or stated as exceptions; the above requirements apply either way.

8. Termination.

You may not propagate or modify a covered work except as expressly provided under this License. Any attempt otherwise to propagate or modify it is void, and will automatically terminate your rights under this License (including any patent licenses granted under the third paragraph of section 11).

However, if you cease all violation of this License, then your license from a particular copyright holder is reinstated (a) provisionally, unless and until the copyright holder explicitly and finally terminates your license, and (b) permanently, if the copyright holder fails to notify you of the violation by some reasonable means prior to 60 days after the cessation.

Moreover, your license from a particular copyright holder is reinstated permanently if the copyright holder notifies you of the violation by some reasonable means, this is the first time you have received notice of violation of this License (for any work) from that copyright holder, and you cure the violation prior to 30 days after your receipt of the notice.

Termination of your rights under this section does not terminate the licenses of parties who have received copies or rights from you under this License. If your rights have been terminated and not permanently reinstated, you do not qualify to receive new licenses for the same material under section 10.

9. Acceptance Not Required for Having Copies.

You are not required to accept this License in order to receive or run a copy of the Program. Ancillary propagation of a covered work occurring solely as a consequence of using peer-to-peer transmission to receive a copy likewise does not require acceptance. However, nothing other than this License grants you permission to propagate or modify any covered work. These actions infringe copyright if you do not accept this License. Therefore, by modifying or propagating a covered work, you indicate your acceptance of this License to do so.

10. Automatic Licensing of Downstream Recipients.

Each time you convey a covered work, the recipient automatically receives a license from the original licensors, to run, modify and propagate that work, subject to this License. You are not responsible for enforcing compliance by third parties with this License.

An “entity transaction” is a transaction transferring control of an organization, or substantially all assets of one, or subdividing an organization, or merging organizations. If propagation of a covered work results from an entity transaction, each party to that transaction who receives a copy of the work also receives whatever licenses to the work the party's predecessor in interest had or could give under the previous paragraph, plus a right to possession of the Corresponding Source of the work from the predecessor in interest, if the predecessor has it or can get it with reasonable efforts.

You may not impose any further restrictions on the exercise of the rights granted or affirmed under this License. For example, you may not impose a license fee, royalty, or other charge for exercise of rights granted under this License, and you may not initiate litigation (including a cross-claim or counterclaim in a lawsuit) alleging that any patent claim is infringed by making, using, selling, offering for sale, or importing the Program or any portion of it.

11. Patents.

A “contributor” is a copyright holder who authorizes use under this License of the Program or a work on which the Program is based. The work thus licensed is called the contributor's “contributor version”.

A contributor's “essential patent claims” are all patent claims owned or controlled by the contributor, whether already acquired or hereafter acquired, that would be infringed by some manner, permitted by this License, of making, using, or selling its contributor version, but do not include claims that would be infringed only as a consequence of further modification of the contributor version. For purposes of this definition, “control” includes the right to grant patent sublicenses in a manner consistent with the requirements of this License.

Each contributor grants you a non-exclusive, worldwide, royalty-free patent license under the contributor's essential patent claims, to make, use, sell, offer for sale, import and otherwise run, modify and propagate the contents of its contributor version.

In the following three paragraphs, a “patent license” is any express agreement or commitment, however denominated, not to enforce a patent (such as an express permission to practice a patent or covenant not to sue for patent infringement). To “grant” such a patent license to a party means to make such an agreement or commitment not to enforce a patent against the party.

If you convey a covered work, knowingly relying on a patent license, and the Corresponding Source of the work is not available for anyone to copy, free of charge and under the terms of this License, through a publicly available network server or other readily accessible means, then you must either (1) cause the Corresponding Source to be so available, or (2) arrange to deprive yourself of the benefit of the patent license for this particular work, or (3) arrange, in a manner consistent with the requirements of this License, to extend the patent license to downstream recipients. “Knowingly relying” means you have actual knowledge that, but for the patent license, your conveying the covered work in a country, or your recipient's use of the covered work in a country, would infringe one or more identifiable patents in that country that you have reason to believe are valid.

If, pursuant to or in connection with a single transaction or arrangement, you convey, or propagate by procuring conveyance of, a covered work, and grant a patent license to some of the parties receiving the covered work authorizing them to use, propagate, modify or convey a specific copy of the covered work, then the patent license you grant is automatically extended to all recipients of the covered work and works based on it.

A patent license is “discriminatory” if it does not include within the scope of its coverage, prohibits the exercise of, or is conditioned on the non-exercise of one or more of the rights that are specifically granted under this License. You may not convey a covered work if you are a party to an arrangement with a third party that is in the business of distributing software, under which you make payment to the third party based on the extent of your activity of conveying the work, and under which the third party grants, to any of the parties who would receive the covered work from you, a discriminatory patent license (a) in connection with copies of the covered work conveyed by you (or copies made from those copies), or (b) primarily for and in connection with specific products or compilations that contain the covered work, unless you entered into that arrangement, or that patent license was granted, prior to 28 March 2007.

Nothing in this License shall be construed as excluding or limiting any implied license or other defenses to infringement that may otherwise be available to you under applicable patent law.

12. No Surrender of Others' Freedom.

If conditions are imposed on you (whether by court order, agreement or otherwise) that contradict the conditions of this License, they do not excuse you from the conditions of this License. If you cannot convey a covered work so as to satisfy simultaneously your obligations under this License and any other pertinent obligations, then as a consequence you may not convey it at all. For example, if you agree to terms that obligate you to collect a royalty for further conveying from those to whom you convey the Program, the only way you could satisfy both those terms and this License would be to refrain entirely from conveying the Program.

13. Use with the GNU Affero General Public License.

Notwithstanding any other provision of this License, you have permission to link or combine any covered work with a work licensed under version 3 of the GNU Affero General Public License into a single combined work, and to convey the resulting work. The terms of this License will continue to apply to the part which is the covered work, but the special requirements of the GNU Affero General Public License, section 13, concerning interaction through a network will apply to the combination as such.

14. Revised Versions of this License.

The Free Software Foundation may publish revised and/or new versions of the GNU General Public License from time to time. Such new versions will be similar in spirit to the present version, but may differ in detail to address new problems or concerns.

Each version is given a distinguishing version number. If the Program specifies that a certain numbered version of the GNU General Public License “or any later version” applies to it, you have the option of following the terms and conditions either of that numbered version or of any later version published by the Free Software Foundation. If the Program does not specify a version number of the GNU General Public License, you may choose any version ever published by the Free Software Foundation.

If the Program specifies that a proxy can decide which future versions of the GNU General Public License can be used, that proxy's public statement of acceptance of a version permanently authorizes you to choose that version for the Program.

Later license versions may give you additional or different permissions. However, no additional obligations are imposed on any author or copyright holder as a result of your choosing to follow a later version.

15. Disclaimer of Warranty.

THERE IS NO WARRANTY FOR THE PROGRAM, TO THE EXTENT PERMITTED BY APPLICABLE LAW. EXCEPT WHEN OTHERWISE STATED IN WRITING THE COPYRIGHT HOLDERS AND/OR OTHER PARTIES PROVIDE THE PROGRAM “AS IS” WITHOUT WARRANTY OF ANY KIND, EITHER EXPRESSED OR IMPLIED, INCLUDING, BUT NOT LIMITED TO, THE IMPLIED WARRANTIES OF MERCHANTABILITY AND FITNESS FOR A PARTICULAR PURPOSE. THE ENTIRE RISK AS TO THE QUALITY AND PERFORMANCE OF THE PROGRAM IS WITH YOU. SHOULD THE PROGRAM PROVE DEFECTIVE, YOU ASSUME THE COST OF ALL NECESSARY SERVICING, REPAIR OR CORRECTION.

16. Limitation of Liability.

IN NO EVENT UNLESS REQUIRED BY APPLICABLE LAW OR AGREED TO IN WRITING WILL ANY COPYRIGHT HOLDER, OR ANY OTHER PARTY WHO MODIFIES AND/OR CONVEYS THE PROGRAM AS PERMITTED ABOVE, BE LIABLE TO YOU FOR DAMAGES, INCLUDING ANY GENERAL, SPECIAL, INCIDENTAL OR CONSEQUENTIAL DAMAGES ARISING OUT OF THE USE OR INABILITY TO USE THE PROGRAM (INCLUDING BUT NOT LIMITED TO LOSS OF DATA OR DATA BEING RENDERED INACCURATE OR LOSSES SUSTAINED BY YOU OR THIRD PARTIES OR A FAILURE OF THE PROGRAM TO OPERATE WITH ANY OTHER PROGRAMS), EVEN IF SUCH HOLDER OR OTHER PARTY HAS BEEN ADVISED OF THE POSSIBILITY OF SUCH DAMAGES.

17. Interpretation of Sections 15 and 16.

If the disclaimer of warranty and limitation of liability provided above cannot be given local legal effect according to their terms, reviewing courts shall apply local law that most closely approximates an absolute waiver of all civil liability in connection with the Program, unless a warranty or assumption of liability accompanies a copy of the Program in return for a fee.

END OF TERMS AND CONDITIONS

BoringSSL License

BoringSSL is a fork of OpenSSL. As such, large parts of it fall under OpenSSL licensing. Files that are completely new have a Google copyright and an ISC license. This license is reproduced at the bottom of this file.

Contributors to BoringSSL are required to follow the CLA rules for Chromium: https://cla.developers.google.com/clas

Files in third_party/ have their own licenses, as described therein. The MIT license, for third_party/fiat, which, unlike other third_party directories, is compiled into non-test libraries, is included below.

The OpenSSL toolkit stays under a dual license, i.e. both the conditions of the OpenSSL License and the original SSLeay license apply to the toolkit. See below for the actual license texts. Actually both licenses are BSD-style Open Source licenses. In case of any license issues related to OpenSSL please contact openssl-core@openssl.org.

The following are Google-internal bug numbers where explicit permission from some authors is recorded for use of their work. (This is purely for our own record keeping.)

27287199

27287880

27287883

OpenSSL License

Copyright (c) 1998-2011 The OpenSSL Project. All rights reserved.

Redistribution and use in source and binary forms, with or without modification, are permitted provided that the following conditions are met:

1. Redistributions of source code must retain the above copyright notice, this list of conditions and the following disclaimer.
2. Redistributions in binary form must reproduce the above copyright notice, this list of conditions and the following disclaimer in the documentation and/or other materials provided with the distribution.
3. All advertising materials mentioning features or use of this software must display the following acknowledgment: "This product includes software developed by the OpenSSL Project for use in the OpenSSL Toolkit. (http://www.openssl.org/)"
4. The names "OpenSSL Toolkit" and "OpenSSL Project" must not be used to endorse or promote products derived from this software without prior written permission. For written permission, please contact openssl-core@openssl.org.
5. Products derived from this software may not be called "OpenSSL" nor may "OpenSSL" appear in their names without prior written permission of the OpenSSL Project.
6. Redistributions of any form whatsoever must retain the following acknowledgment: "This product includes software developed by the OpenSSL Project for use in the OpenSSL Toolkit (http://www.openssl.org/)"

THIS SOFTWARE IS PROVIDED BY THE OpenSSL PROJECT ``AS IS'' AND ANY EXPRESSED OR IMPLIED WARRANTIES, INCLUDING, BUT NOT LIMITED TO, THE IMPLIED WARRANTIES OF MERCHANTABILITY AND FITNESS FOR A PARTICULAR PURPOSE ARE DISCLAIMED. IN NO EVENT SHALL THE OpenSSL PROJECT OR ITS CONTRIBUTORS BE LIABLE FOR ANY DIRECT, INDIRECT, INCIDENTAL, SPECIAL, EXEMPLARY, OR CONSEQUENTIAL DAMAGES (INCLUDING, BUT NOT LIMITED TO, PROCUREMENT OF SUBSTITUTE GOODS OR SERVICES; LOSS OF USE, DATA, OR PROFITS; OR BUSINESS INTERRUPTION) HOWEVER CAUSED AND ON ANY THEORY OF LIABILITY, WHETHER IN CONTRACT, STRICT LIABILITY, OR TORT (INCLUDING NEGLIGENCE OR OTHERWISE) ARISING IN ANY WAY OUT OF THE USE OF THIS SOFTWARE, EVEN IF ADVISED OF THE POSSIBILITY OF SUCH DAMAGE.

This product includes cryptographic software written by Eric Young (eay@cryptsoft.com). This product includes software written by Tim Hudson (tjh@cryptsoft.com).

Original SSLeay License

Copyright (C) 1995-1998 Eric Young (eay@cryptsoft.com) All rights reserved.

This package is an SSL implementation written by Eric Young (eay@cryptsoft.com). The implementation was written so as to conform with Netscapes SSL.

This library is free for commercial and non-commercial use as long as the following conditions are adhered to. The following conditions apply to all code found in this distribution, be it the RC4, RSA, lhash, DES, etc., code; not just the SSL code. The SSL documentation included with this distribution is covered by the same copyright terms except that the holder is Tim Hudson (tjh@cryptsoft.com).

Copyright remains Eric Young's, and as such any Copyright notices in the code are not to be removed. If this package is used in a product, Eric Young should be given attribution as the author of the parts of the library used. This can be in the form of a textual message at program startup or in documentation (online or textual) provided with the package.

Redistribution and use in source and binary forms, with or without modification, are permitted provided that the following conditions are met:

1. Redistributions of source code must retain the copyright notice, this list of conditions and the following disclaimer.
2. Redistributions in binary form must reproduce the above copyright notice, this list of conditions and the following disclaimer in the documentation and/or other materials provided with the distribution.
3. All advertising materials mentioning features or use of this software must display the following acknowledgement: "This product includes cryptographic software written by Eric Young (eay@cryptsoft.com)" The word 'cryptographic' can be left out if the routines from the library being used are not cryptographic related :-).
4. If you include any Windows specific code (or a derivative thereof) from the apps directory (application code) you must include an acknowledgement: "This product includes software written by Tim Hudson (tjh@cryptsoft.com)"

THIS SOFTWARE IS PROVIDED BY ERIC YOUNG ``AS IS'' AND ANY EXPRESS OR IMPLIED WARRANTIES, INCLUDING, BUT NOT LIMITED TO, THE IMPLIED WARRANTIES OF MERCHANTABILITY AND FITNESS FOR A PARTICULAR PURPOSE ARE DISCLAIMED. IN NO EVENT SHALL THE AUTHOR OR CONTRIBUTORS BE LIABLE FOR ANY DIRECT, INDIRECT, INCIDENTAL, SPECIAL, EXEMPLARY, OR CONSEQUENTIAL DAMAGES (INCLUDING, BUT NOT LIMITED TO, PROCUREMENT OF SUBSTITUTE GOODS OR SERVICES; LOSS OF USE, DATA, OR PROFITS; OR BUSINESS INTERRUPTION) HOWEVER CAUSED AND ON ANY THEORY OF LIABILITY, WHETHER IN CONTRACT, STRICT LIABILITY, OR TORT (INCLUDING NEGLIGENCE OR OTHERWISE) ARISING IN ANY WAY OUT OF THE USE OF THIS SOFTWARE, EVEN IF ADVISED OF THE POSSIBILITY OF SUCH DAMAGE.

The licence and distribution terms for any publically available version or derivative of this code cannot be changed. i.e. this code cannot simply be copied and put under another distribution licence [including the GNU Public Licence.]

ISC license used for completely new code in BoringSSL:

Copyright (c) 2015, Google Inc.

Permission to use, copy, modify, and/or distribute this software for any purpose with or without fee is hereby granted, provided that the above copyright notice and this permission notice appear in all copies.

THE SOFTWARE IS PROVIDED "AS IS" AND THE AUTHOR DISCLAIMS ALL WARRANTIES WITH REGARD TO THIS SOFTWARE INCLUDING ALL IMPLIED WARRANTIES OF MERCHANTABILITY AND FITNESS. IN NO EVENT SHALL THE AUTHOR BE LIABLE FOR ANY SPECIAL, DIRECT, INDIRECT, OR CONSEQUENTIAL DAMAGES OR ANY DAMAGES WHATSOEVER RESULTING FROM LOSS OF USE, DATA OR PROFITS, WHETHER IN AN ACTION OF CONTRACT, NEGLIGENCE OR OTHER TORTIOUS ACTION, ARISING OUT OF OR IN CONNECTION WITH THE USE OR PERFORMANCE OF THIS SOFTWARE.

The code in third_party/fiat carries the MIT license:

Copyright (c) 2015-2016 the fiat-crypto authors (see https://github.com/mit-plv/fiat-crypto/blob/master/AUTHORS).

Permission is hereby granted, free of charge, to any person obtaining a copy of this software and associated documentation files (the "Software"), to deal in the Software without restriction, including without limitation the rights to use, copy, modify, merge, publish, distribute, sublicense, and/or sell copies of the Software, and to permit persons to whom the Software is furnished to do so, subject to the following conditions:

The above copyright notice and this permission notice shall be included in all copies or substantial portions of the Software.

THE SOFTWARE IS PROVIDED "AS IS", WITHOUT WARRANTY OF ANY KIND, EXPRESS OR IMPLIED, INCLUDING BUT NOT LIMITED TO THE WARRANTIES OF MERCHANTABILITY, FITNESS FOR A PARTICULAR PURPOSE AND NONINFRINGEMENT. IN NO EVENT SHALL THE AUTHORS OR COPYRIGHT HOLDERS BE LIABLE FOR ANY CLAIM, DAMAGES OR OTHER LIABILITY, WHETHER IN AN ACTION OF CONTRACT, TORT OR OTHERWISE, ARISING FROM, OUT OF OR IN CONNECTION WITH THE SOFTWARE OR THE USE OR OTHER DEALINGS IN THE SOFTWARE.

The code in third_party/sike also carries the MIT license:

Copyright (c) Microsoft Corporation. All rights reserved.

Permission is hereby granted, free of charge, to any person obtaining a copy of this software and associated documentation files (the "Software"), to deal in the Software without restriction, including without limitation the rights to use, copy, modify, merge, publish, distribute, sublicense, and/or sell copies of the Software, and to permit persons to whom the Software is furnished to do so, subject to the following conditions:

The above copyright notice and this permission notice shall be included in all copies or substantial portions of the Software.

THE SOFTWARE IS PROVIDED "AS IS", WITHOUT WARRANTY OF ANY KIND, EXPRESS OR IMPLIED, INCLUDING BUT NOT LIMITED TO THE WARRANTIES OF MERCHANTABILITY, FITNESS FOR A PARTICULAR PURPOSE AND NONINFRINGEMENT. IN NO EVENT SHALL THE AUTHORS OR COPYRIGHT HOLDERS BE LIABLE FOR ANY CLAIM, DAMAGES OR OTHER

LIABILITY, WHETHER IN AN ACTION OF CONTRACT, TORT OR OTHERWISE, ARISING FROM, OUT OF OR IN CONNECTION WITH THE SOFTWARE OR THE USE OR OTHER DEALINGS IN THE SOFTWARE

Licenses for support code

Parts of the TLS test suite are under the Go license. This code is not included in BoringSSL (i.e. libcrypto and libssl) when compiled, however, so distributing code linked against BoringSSL does not trigger this license:

Copyright (c) 2009 The Go Authors. All rights reserved.

Redistribution and use in source and binary forms, with or without modification, are permitted provided that the following conditions are met:

* Redistributions of source code must retain the above copyright notice, this list of conditions and the following disclaimer.
* Redistributions in binary form must reproduce the above copyright notice, this list of conditions and the following disclaimer in the documentation and/or other materials provided with the distribution.
* Neither the name of Google Inc. nor the names of its contributors may be used to endorse or promote products derived from this software without specific prior written permission.

THIS SOFTWARE IS PROVIDED BY THE COPYRIGHT HOLDERS AND CONTRIBUTORS "AS IS" AND ANY EXPRESS OR IMPLIED WARRANTIES, INCLUDING, BUT NOT LIMITED TO, THE IMPLIED WARRANTIES OF MERCHANTABILITY AND FITNESS FOR A PARTICULAR PURPOSE ARE DISCLAIMED. IN NO EVENT SHALL THE COPYRIGHT OWNER OR CONTRIBUTORS BE LIABLE FOR ANY DIRECT, INDIRECT, INCIDENTAL, SPECIAL, EXEMPLARY, OR CONSEQUENTIAL DAMAGES (INCLUDING, BUT NOT LIMITED TO, PROCUREMENT OF SUBSTITUTE GOODS OR SERVICES; LOSS OF USE,

DATA, OR PROFITS; OR BUSINESS INTERRUPTION) HOWEVER CAUSED AND ON ANY THEORY OF LIABILITY, WHETHER IN CONTRACT, STRICT LIABILITY, OR TORT (INCLUDING NEGLIGENCE OR OTHERWISE) ARISING IN ANY WAY OUT OF THE USE OF THIS SOFTWARE, EVEN IF ADVISED OF THE POSSIBILITY OF SUCH DAMAGE.

Apache License

Version 2.0, January 2004 (http://www.apache.org/licenses/)

TERMS AND CONDITIONS FOR USE, REPRODUCTION, AND DISTRIBUTION

0. Definitions.

"License" shall mean the terms and conditions for use, reproduction, and distribution as defined by Sections 1 through 9 of this document.

"Licensor" shall mean the copyright owner or entity authorized by the copyright owner that is granting the License.

"Legal Entity" shall mean the union of the acting entity and all other entities that control, are controlled by, or are under common control with that entity. For the purposes of this definition, "control" means (i) the power, direct or indirect, to cause the direction or management of such entity, whether by contract or otherwise, or (ii) ownership of fifty percent (50%) or more of the outstanding shares, or (iii) beneficial ownership of such entity.

"You" (or "Your") shall mean an individual or Legal Entity exercising permissions granted by this License.

"Source" form shall mean the preferred form for making modifications, including but not limited to software source code, documentation source, and configuration files.

"Object" form shall mean any form resulting from mechanical transformation or translation of a Source form, including but not limited to compiled object code, generated documentation, and conversions to other media types.

"Work" shall mean the work of authorship, whether in Source or Object form, made available under the License, as indicated by a copyright notice that is included in or attached to the work (an example is provided in the Appendix below).

"Derivative Works" shall mean any work, whether in Source or Object form, that is based on (or derived from) the Work and for which the editorial revisions, annotations, elaborations, or other modifications represent, as a whole, an original work of authorship. For the purposes of this License, Derivative Works shall not include works that remain separable from, or merely link (or bind by name) to the interfaces of, the Work and Derivative Works thereof.

"Contribution" shall mean any work of authorship, including the original version of the Work and any modifications or additions to that Work or Derivative Works thereof, that is intentionally submitted to Licensor for inclusion in the Work by the copyright owner or by an individual or Legal Entity authorized to submit on behalf of the copyright owner. For the purposes of this definition, "submitted" means any form of electronic, verbal, or written communication sent to the Licensor or its representatives, including but not limited to communication on electronic mailing lists, source code control systems, and issue tracking systems that are managed by, or on behalf of, the Licensor for the purpose of discussing and improving the Work, but excluding communication that is conspicuously marked or otherwise designated in writing by the copyright owner as "Not a Contribution."

"Contributor" shall mean Licensor and any individual or Legal Entity on behalf of whom a Contribution has been received by Licensor and subsequently incorporated within the Work.

1. Grant of Copyright License.

Subject to the terms and conditions of this License, each Contributor hereby grants to You a perpetual, worldwide, non-exclusive, no-charge, royalty-free, irrevocable copyright license to reproduce, prepare Derivative Works of, publicly display, publicly perform, sublicense, and distribute the Work and such Derivative Works in Source or Object form.

2. Grant of Patent License.

Subject to the terms and conditions of this License, each Contributor hereby grants to You a perpetual, worldwide, non-exclusive, no-charge, royalty-free, irrevocable (except as stated in this section) patent license to make, have made, use, offer to sell, sell, import, and otherwise transfer the Work, where such license applies only to those patent claims licensable by such Contributor that are necessarily infringed by their Contribution(s) alone or by combination of their Contribution(s) with the Work to which such Contribution(s) was submitted. If You institute patent litigation against any entity (including a cross-claim or counterclaim in a lawsuit) alleging that the Work or a Contribution incorporated within the Work constitutes direct or contributory patent infringement, then any patent licenses granted to You under this License for that Work shall terminate as of the date such litigation is filed.

3. Redistribution.

You may reproduce and distribute copies of the Work or Derivative Works thereof in any medium, with or without modifications, and in Source or Object form, provided that You meet the following conditions:

(a) You must give any other recipients of the Work or Derivative Works a copy of this License; and

(b) You must cause any modified files to carry prominent notices stating that You changed the files; and

(c) You must retain, in the Source form of any Derivative Works that You distribute, all copyright, patent, trademark, and attribution notices from the Source form of the Work, excluding those notices that do not pertain to any part of the Derivative Works; and

(d) If the Work includes a "NOTICE" text file as part of its distribution, then any Derivative Works that You distribute must include a readable copy of the attribution notices contained within such NOTICE file, excluding those notices that do not pertain to any part of the Derivative Works, in at least one of the following places: within a NOTICE text file distributed as part of the Derivative Works; within the Source form or documentation, if provided along with the Derivative Works; or, within a display generated by the Derivative Works, if and wherever such third-party notices normally appear. The contents of the NOTICE file are for informational purposes only and do not modify the License. You may add Your own attribution notices within Derivative Works that You distribute, alongside or as an addendum to the NOTICE text from the Work, provided that such additional attribution notices cannot be construed as modifying the License.

You may add Your own copyright statement to Your modifications and may provide additional or different license terms and conditions for use, reproduction, or distribution of Your modifications, or for any such Derivative Works as a whole, provided Your use, reproduction, and distribution of the Work otherwise complies with the conditions stated in this License.

4. Submission of Contributions.

Unless You explicitly state otherwise, any Contribution intentionally submitted for inclusion in the Work by You to the Licensor shall be under the terms and conditions of this License, without any additional terms or conditions. Notwithstanding the above, nothing herein shall supersede or modify the terms of any separate license agreement you may have executed with Licensor regarding such Contributions.

5. Trademarks.

This License does not grant permission to use the trade names, trademarks, service marks, or product names of the Licensor, except as required for reasonable and customary use in describing the origin of the Work and reproducing the content of the NOTICE file.

6. Disclaimer of Warranty.

Unless required by applicable law or agreed to in writing, Licensor provides the Work (and each Contributor provides its Contributions) on an "AS IS" BASIS, WITHOUT WARRANTIES OR CONDITIONS OF ANY KIND, either express or implied, including, without limitation, any warranties or conditions of TITLE, NON-INFRINGEMENT, MERCHANTABILITY, or FITNESS FOR A PARTICULAR PURPOSE. You are solely responsible for determining the appropriateness of using or redistributing the Work and assume any risks associated with Your exercise of permissions under this License.

7. Limitation of Liability.

In no event and under no legal theory, whether in tort (including negligence), contract, or otherwise, unless required by applicable law (such as deliberate and grossly negligent acts) or agreed to in writing, shall any Contributor be liable to You for damages, including any direct, indirect, special, incidental, or consequential damages of any character arising as a result of this License or out of the use or inability to use the Work (including but not limited to damages for loss of goodwill, work stoppage, computer failure or malfunction, or any and all other commercial damages or losses), even if such Contributor has been advised of the possibility of such damages.

8. Accepting Warranty or Additional Liability.

While redistributing the Work or Derivative Works thereof, You may choose to offer, and charge a fee for, acceptance of support, warranty, indemnity, or other liability obligations and/or rights consistent with this License. However, in accepting such obligations, You may act only on Your own behalf and on Your sole responsibility, not on behalf of any other Contributor, and only if You agree to indemnify, defend, and hold each Contributor harmless for any liability incurred by, or claims asserted against, such Contributor by reason of your accepting any such warranty or additional liability.

END OF TERMS AND CONDITIONS

Suprema Inc.

17F Parkview Tower, 248, Jeongjail-ro, Bundang-gu, Seongnam-si, Gyeonggi-do, 13554, Rep. of KOREA

Tel: +82 31 783 4502 | Fax: +82 31 783 4503 | Inquiry: sales_sys@supremainc.com

Para obtener más información sobre las sucursales globales de Suprema,
visite la página web a continuación escaneando el código QR.
http://www.supremainc.com/en/about/contact-us.asp

© 2025 Suprema Inc. Suprema y los números y los nombres que identifican productos mencionados en este documento son marcas comerciales registradas de Suprema, Inc. Todas las marcas y los nombres de productos que no pertenecen a Suprema son marcas comerciales o marcas comerciales registradas de sus respectivas compañías. La apariencia del producto, el estado de la estructura o las especificaciones están sujetas a cambio sin previo aviso.